ESTUN ROBOTICS

OPERATION INSTRUCTIONS

ESTUN Arc Welding Robot- EWAS series
Robot Body Operation Instructions

ALL MADE BY ESTUN

ESTUN AUTOMATION

ESTUN Arc Welding Robot- EWAS series

Robot Body Operation Instructions

M-1201EN-04

Thank you for purchasing ESTUN robots.

Before using the robot, be sure to read the SAFETY PRECAUTION and understand the content.

ESTUN endeavor to improve the products. All specifications and designs are subject to change without notice.

In this manual, all specifications and information are checked on a regular basis. Nevertheless, discrepancies cannot be precluded, for which reason we are not able to guarantee total conformity. ESTUN assumes no responsibility for any direct or indirect losses arising from use of this manual and products described herein.

Keep this manual handy for easy access at all times.

No part of this manual may be reproduced in any form.
ESTUN Robotics. All Rights Reserved Copyright.

Service Line: 400-025-3336

ADD: No.1888, Ji Yin Avenue, Jiangning Area, Nanjing, ChinaPost Code: 211102

TEL: +86-025-58328532

WEB: www.estun.com

E-mail: export@estun.com

SAFETY

This chapter describes the precautions which must be followed to ensure the safe use of the robot. Before using the robot, be sure to read this chapter thoroughly.

ESTUN robots must be transported, mounted and operated in accordance with national laws, regulations and standards. Appropriate safeguards must be correctly performed to protect the users. Before using (mounting, operating, maintaining, repairing) the robot, be sure to read and understand this manual and its relevant manuals. Be sure to have familiarization with the knowledge of robot system and the safety precaution. Even if all instructions are followed, this is not a guarantee that the robot will not cause injuries or damage.

DEFINITION OF USER

The personnel can be defined as follows.

- Operator
  Turns the robot power ON/OFF.
  Starts the robot program from the panel.
- Programmer
  Operates the robot.
  Teaches the robot inside the safety area.
- Maintenance engineer
  Operates the robot.
  Teaches the robot inside the safety area.
  Maintenance (repair, adjustment, replacement).

Operator must not work in the safety area.

Programmer and maintenance engineer can work in the safety area.

During operation, programming, and maintenance of the robot, the operator, programmer, and maintenance engineer should take precautions to ensure the safety by wearing the following safety items.

- Clothes for operation
- Safety shoes
- A helmet

SPECIAL TRAINING

Tasks in the safety area include transportation, setting, teaching, adjustment, maintenance, etc.

Training course must be performed before operating the robot.

For more information about training course, contact ESTUN.

DEFINITION OF SAFETY NOTATIONS

Precautions and information are defined as follows.

Symbol	Definitions
WARNING	**Danger notation** Death or serious injury will be expected to occur if the user fails to follow the approved procedure.
CAUTION	**Caution notation** Minor or moderate injury of the user or equipment damage will be expected to occur if the user fails to follow the approved procedure.
IN FO	**Information** A supplementary explanation helps users operating the robot more efficiently.

SAFETY OF THE USER

(1) The robot should be transported and installed as procedures recommended by ESTUN. Wrong procedures may cause severe injuries or damage due to the robot fall.
(2) Draw an area clearly indicates the safety area. Install a fence or hang a warning board to ensure the safety operation of the robot, and keep unauthorized personnel outside the safety area.
(3) Never hang any tools above the robot. Falling of these tools may cause damage to equipment.
(4) Never lean on the cabinet. Never touch any buttons without permission. Unexpected movement of the robot may cause personnel injuries and equipment damage.
(5) Take precautions for falling parts to avoid injuries when disassemble the robot.
(6) Turn off the power when adjusting peripheral equipment.
(7) Peripheral equipment must be grounded.
(8) The robot should be operated in a low speed in the first operation. The speed should be added gradually to check if there is any abnormal situation.
(9) Do not wear gloves when using the teach pendant. Operate with gloves may cause an operation error.
(10) Programs, system variables, and other information can be saved on the memory card or USB memories. Be sure to save the data periodically in case that the data is lost.
(11) Never forcibly move any axis of the robot. Move the axes forcibly may cause injuries or damage.
(12) Take precautions when wiring and piping between the robot, the cabinet, and peripheral equipment. Put the pipes, wires or cables through a pit or covered with a protective lid, to avoid stepped by personnel or run over by a forklift.
(13) Unexpected movement may occur on any operating robot, which will cause severe injuries or damages in the working area. Test (safe door, brake, safe indicators, etc.) must be performed on each safety measures before using the robot. Before turn on the system, make sure that no one is in the working space.
(14) Never set motion range or load condition exceeds the rated range. Incorrect setting may cause personnel injury and equipment damage.
(15) Observe the following precautions when teaching inside the working space of the robot：
- Do not enable the system unless the mode is switched to manual, and make sure that all auto-control is cut off.
- Speed must be limited under 250mm/s at manual mode. Only authorized person with fully understand of the risks can adjust the robot to rated speed manually.
- Be careful about rotating joints to prevent hair and clothes involved. Take precautions of injury or damage caused by the manipulator or other auxiliary devices.
- Check the motor brake to avoid personnel injuries caused by unexpected situation.
- Always have an escape plan in mind in case the robot comes towards you unexpectedly.
- Ensure that there is a place to retreat to in case of emergency.

WARNING	**Never stand beneath the robot in case of unexpected movement or the system be turned on inadvertently.**

CAUTION	**Make sure there is a CO2 fire extinguisher at hand.**

SAFETY OF OPERATORS：

(1) Before operating the robot, check that the SERVO ON indicator goes out when the EMERGENCY STOP button on the right of the front door of the controller and the pendant are pressed. And confirm that the power is turned off.
(2) Never allow unauthorized personnel to touch the controller during operation. This may result in unexpected movement of the robot, severe injuries and material damage.
(3) When attaching tools to the robot, be sure to turn off the power of the controller and the peripheral equipment, and display a warning sign. Turning the power on during equipment installation may cause electric shock or injury due to unexpected movement of the robot.
(4) Emergency stop
Emergency stop is an external button of the controller that can stop the robot operation.
When emergency button is pressed, the power of the robot (except the power of the servo) is cut off.

The system will not run unless the pressed emergency button being released and the system being turned on.

There are several emergency stop buttons in a robot system to stop the robot in case of emergencies. The red button, as shown in the left figure, can be mounted on the teach pendant and the controller. Certainly, the emergency buttons can be mounted by special requirement.

Emergency stop button should be mounted where is easy to reach, so that the buttons can be pressed down immediately in case of emergencies.

WARNING

Operators must take precautions to avoid high voltage from cables of servo motors, grippers and other devices.

CAUTION

Emergency button is used in case of emergency only. Do not use it to stop the robot for normal operation.

SAFETY OF PROGRAMMERS：

While teaching the robot, the programmer must enter the robot operation area. The programmer must ensure the safety especially.

CAUTION

Turn on or off the system by press or release Mot button on the teach pendant.

To use the teach pendant safely, the following precautions should be taken.

- Be sure that the enable switch is effective at any time.
- Turn off the enable switch when pausing, programming or testing the system.
- Teach pendant must be taken with the programmer when teaching in the work space, to avoid inadvertent operation by unauthorized person.
- Teach pendant must not be left within the work space of the robot, as injury or damage can occur if the robot comes in contact with the teach pendant.

SAFETY OF MAINTENANCE ENGINEERS：

(1) Heated parts

Some parts of the robot are heated when the robot is operating, especially the servo motor and reducer. If a maintenance engineer needs to touch such a part, the user should wear heat-resistant gloves or use other protective tools.

CAUTION

Try to feel the temperature of heated parts before touching them, to avoid burn injuries. After turning off the power supply, wait until the heated parts cool down before performing any maintenance.

(2) Disassembly parts

Open the cover or shell only after interior parts such as gears are not moving any more. Never open the cover or shell when the gear or bearing is moving. Use auxiliary device to keep interior part to its position.

Observe the following precaution when performing the first test after installation, inspection or maintenance:

a) Clear tools to proper locations outside of the working space of the robot.

b) Make sure that all precaution measures are available.

c) Make sure that there is no one in the working space of the robot.

d) Pay special attention to working condition of the maintenance parts when performing test.

Never use the manipulator as a ladder when performing maintenance. Never climb on the manipulator to avoid falling down.

(3) Pneumatic / hydraulic pressure

There may be air/liquid residue in the system when the air pump or hydraulic pump is turned off. Before checking the pneumatic or hydraulic parts, release remaining pressure from the system to avoid

personnel injury or equipment damage.

CAUTION	**Install a safety valve in case of accident.**

(4) Although the power supply need to be turned on during fault diagnosis, it must be turned off when perform maintenance.

(5) Brake inspection

Brake may be wearing in daily operation. So brake inspection should be performed by the following procedure:

a) Move each joint to the position where the joint bears maximum load.

b) Turn off the robot. The brake works.

c) Mark each joint.

d) Check if the joint moves over a period of time.

(6) Greasing

Personnel injury or equipment damage may occur during greasing. Observe the following precautions before greasing.

- Take additional care of safety by wearing safety items (such as gloves) to avoid injury from heated oil or reducer.
- Open the oil chamber with caution and keep away from the opening. Oil may spray due to oil pressure.
- Feed the oil according to required quantity and never fill up the oil chamber. Check the oil indicator when finished.
- Never mix different types of oil into one reducer. Clean the oil chamber thoroughly before changing oil type.
- Oil draining must be performed thoroughly. Check the oil indicator when finished.

INFO	**Operate the robot for a short period of time before oil draining to heat the oil.**

SAFETY OF THE TOOLS AND PERIPHERAL EQUIPMENT

Peripheral device may still be running even after the system has been turned off. Personnel injury may occur due to damaged power lines.

SAFETY OF THE ROBOT MECHANICAL UNIT

For abnormal or emergency situations, e.g. persons trapped in or pinched by the robot, the robot axes should be moved. (Contact ESTUN for more details about dismantling).

Small arms can be moved by hand. Lager arms should be moved by crane or other handling equipment.

Fasten the robot firmly before releasing the brake to avoid secondary injury caused by falling arms.

STOP TYPE OF ROBOT

There are three types of robot stop.

Power-off stop

Servo power is turned off and the robots stops immediately. Servo power is turned off when the robot is moving, the path of the deceleration in uncontrolled.

The following processing is performed at Power-off stop:

- An alarm is generated and servo power is turned off immediately.
- Execution of the program is paused.

Frequent Power-off stop of the robot during operation can cause failures of the robot. Avoid system designs that require routine or frequent Power-off stop conditions.

Alarm stop

The robot system sends alarm (not include power-off alarm), and the robot is decelerated until it stops by control instructions.

The following processing is performed at Alarm stop:

- An alarm (not include power-off alarm) is generated due to overload, system faulty, etc.
- Control instruction is send from servo system. The robot operation is decelerated until it stops. Execution of the program is paused.
- Servo power is off.

Hold

The robot is decelerated until it stops, and servo power remains on.

The following processing is performed at Hold:

- The robot operation is decelerated until it stops. Execution of the program is paused.

LABELS

(1) Electric Shock Warning

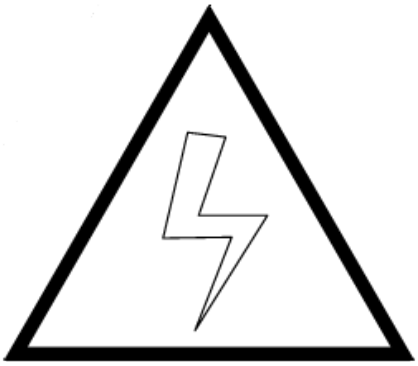

Fig 0.1 Electric Shock Warning

This label indicates hazardous voltage or electric shock.

(2) High-temperature Warning

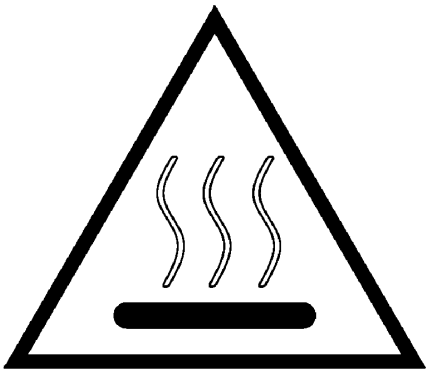

Fig 0.2 High-temperature Warning

Be cautious about a section where this label is affixed, as the section generates heat. If you have to inevitably touch such a section when it is hot, use a protection provision such as heat-resistant gloves.

(3) No Step-on Warning

Fig 0.3 Step-on prohibitive Warning

Never step on or climb the robot or controller as it may adversely affect the robot or controller and may get hurt if you lose your footing as well.

(4) Personal Injury Warning

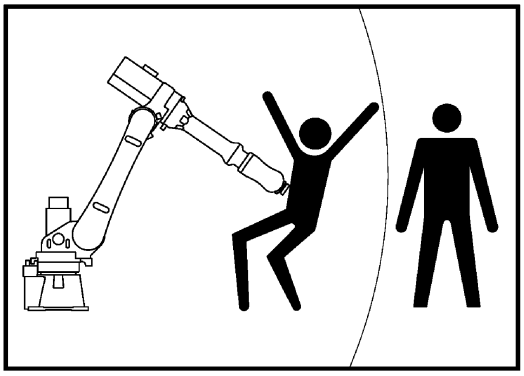

Fig 0.4 Personal Injury Warning

Never enter the operation area while the Manipulator is moving. This is extremely hazardous and may result in serious safety problems.

(5) No Disassembly Warning

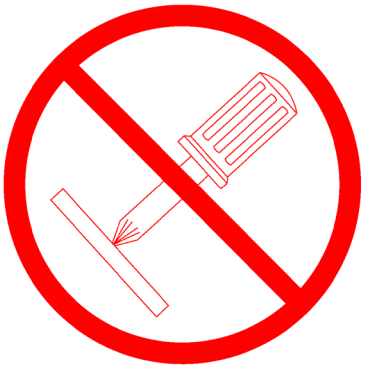

Fig 0.5 No Disassembly Warning

Never perform disassembly arbitrarily where the warning is affixed. Contact ESTUN for disassembly.

(6) Handling Identification

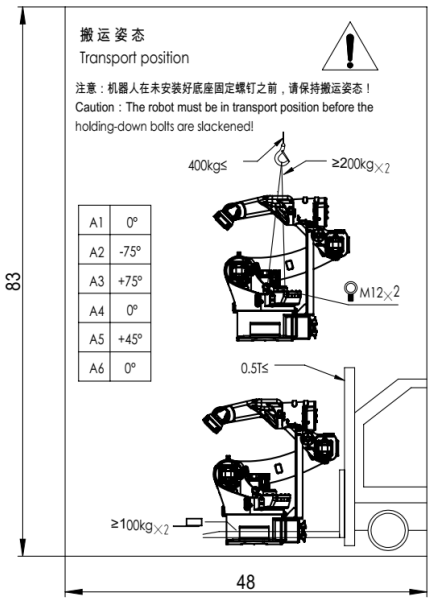

Fig 0.6 ER8-1450-HW Transport Identification

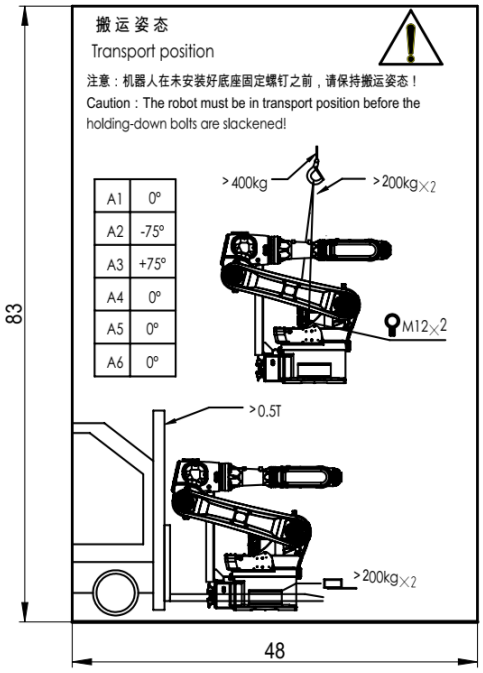

Fig 0.7 ER8-1500-CW Transport Identification

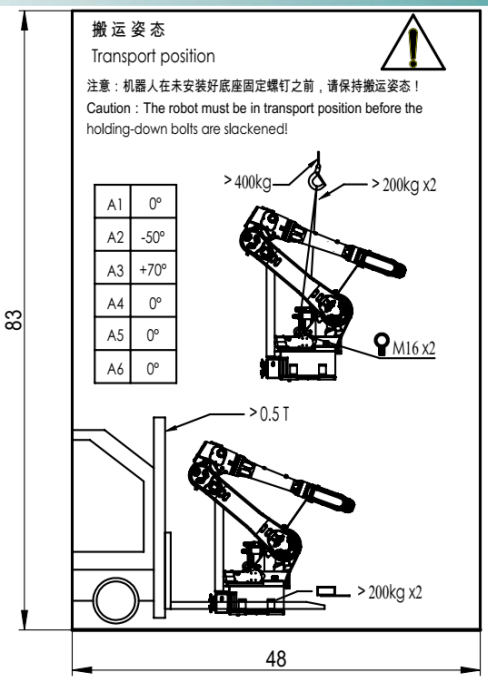

Fig 0.8 ER8-2000-CW Transport Identification

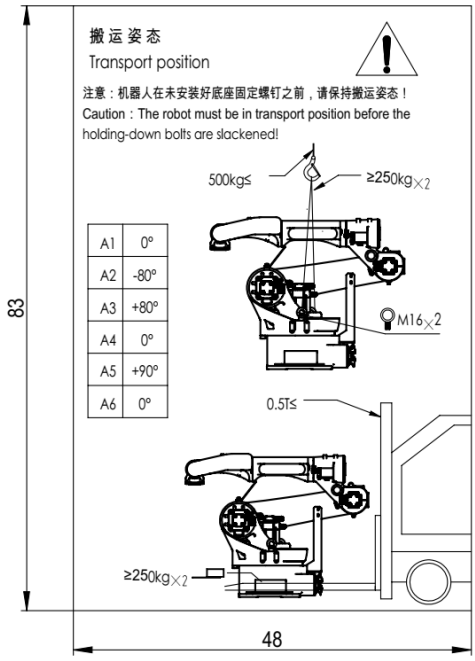

Fig 0.9 ER8-2000-HW、ER8-2000-HW-T Transport Identification

PREFACE

This manual describes the following manipulators.

Model	Load capacity
ER8-1450-HW	8kg
ER8-1500-CW	8kg
ER8-2000-CW	8kg
ER8-2000-HW	8kg
ER8-2000-HW-T	8kg

Related manual

ESTUN Robot Ewas Series - Mechanical Unit Operator's Manual
ESTUN RCS2 System Operator's Manual
ESTUN Robot S1F Control Cabinet Operation Instructions
ESTUN Robot S1E Control Cabinet Operation Instructions

CONTENTS

SAFETY 1
PREFACE 1
1. TRANSPORTATION AND INSTALLATION 1
1.1 TRANSPORTATION 1
1.1.1. Transport by a forklift 3
1.2 INSTALLATION 5
1.3 INSTALLATION CONDITIONS 9
2. CONNECTION WITH THE CONTROLLER 7
3. SPECIFICATIONS 8
3.1 ROBOT CONFIGURATION 8
3.2 EXTERNAL DIMENSIONS AND OPERATING SPACE 12
3.3 ZERO POINT POSITION AND MOTION LIMIT 16
3.4 WRIST LOAD CONDITION 22
3.5 ADDITIONAL LOAD CONDITION 23
4. EQUIPMENT INSTALLATION TO THE ROBOT 26
4.1 FLANGE DIMENSION 26
4.2 EUIPMENT MOUNTING FACE 27
4.3 PIPES AND TUBES 32
5. CHECK AND MAINTENANCE 34
5.1 DAILY CHECKS 34
5.2 PERIODIC CHECKS AND MAINTENANCE 35
5.5.1. POSITION OF OIL INLET/OUTLET ON EACH AXIS 40
5.5.2. PROCEDURE OF GREASING 45
5.5.3. PROCEDURE FOR RELEASING REMAINING PRESSURE WITHIN THE GREASE BATH 46
6. CALIBRATION 47
6.1 INTRODUCTION 47
6.2 QUICK ZERO POSITION CALIBRATION 47
6.3 MECHANICAL ZERO POSITION CALIBRATION 48
6.3.1. ZERO POSITION CALIBRATION METHOD 48
6.3.2. CALIBRATION IN EACH AXIS 48
7. TROUBLESHOOTING 54
7.1 TOOLS 54
7.2 TROUBLESHOOTING 54
7.3 REPLACING THE SERVO MOTOR 55
APPENDIX 31
APPENDIX A BOLT TORQUE LIST 31
APPENDIX B SPECIFICATION OF BOLT 31
APPENDIX C ER8-1450-HW Suggested spare parts list（for single unit） 33
APPENDIX D ER8-1500-CW Suggested spare parts list（for single unit） 33
APPENDIX E ER8-2000-CW Suggested spare parts list（for single unit） 33
APPENDIX F ER8-2000-HW Suggested spare parts list（for single unit） 33
APPENDIX G ER8-2000-HW Suggested spare parts list（for single unit） 33

REVISION RECORD..... 34

1. TRANSPORTATION AND INSTALLATION

1.1 TRANSPORTATION

WARNING

When transport the robot, be sure the robot is in safe condition, or it may result in serious personnel injury and/or equipment damage.

Turn each axis to transportation gesture before move the robot and be sure to keep the gesture during transportation until it be properly installed and mounted. Transportation gesture of each axis is shown below. Perform the transportation properly, or it may result in personnel injury or equipment damage.

Position	J1-axis	J2-axis	J3-axis	J4-axis	J5-axis	J6-axis
ER8-1450-HW	0°	-75°	+75°	0°	+45°	0°
ER8-1500-CW	0°	-75°	+75°	0°	0°	0°
ER8-2000-CW	0°	-50°	+70°	0°	0°	0°
ER8-2000-HW **ER8-2000-HW-T**	0°	-80°	+80°	0°	+90°	0°

Refer to theoretical weight of main parts shown below to install, disassemble and transport the robot.

Parts	Weight（kg）			
	ER8-1450-HW	**ER8-1500-CW**	**ER8-2000-CW**	**ER8-2000-HW** **ER8-2000-HW-T**
Robot	170	165	281	286
Big arm casting	19.4	19	38.4	39.7
Base assembly (Including rotation base)	100.8	99	177.8	178.3
Small arm assembly (Including motor casing and motors of J3,J4 J5 axes)	28.6	25	32.4	45
Wrist (including motors of J6-axis)	11.6	11	11	11.8

IN FO

Some parts with less weight are not listed. Contact ESTUN

For ER8-1450-H robot ,fixed bracket should be mounted before transport the robot and be removed before install the robot. Refer to the following figures when remove the bolts on fixed bracket.

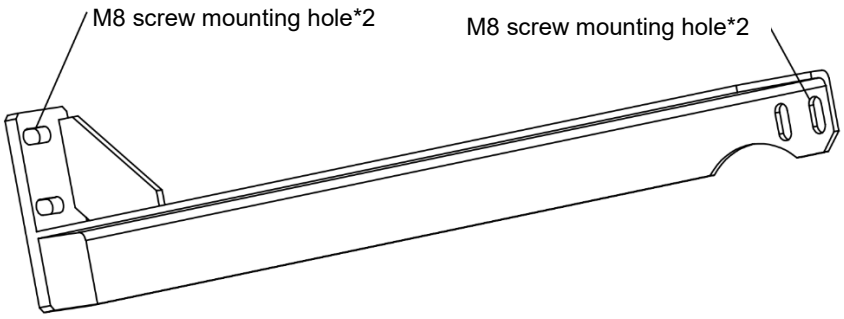

Fig 1.1 Robot fixed bracket(ER8-1450-HW)

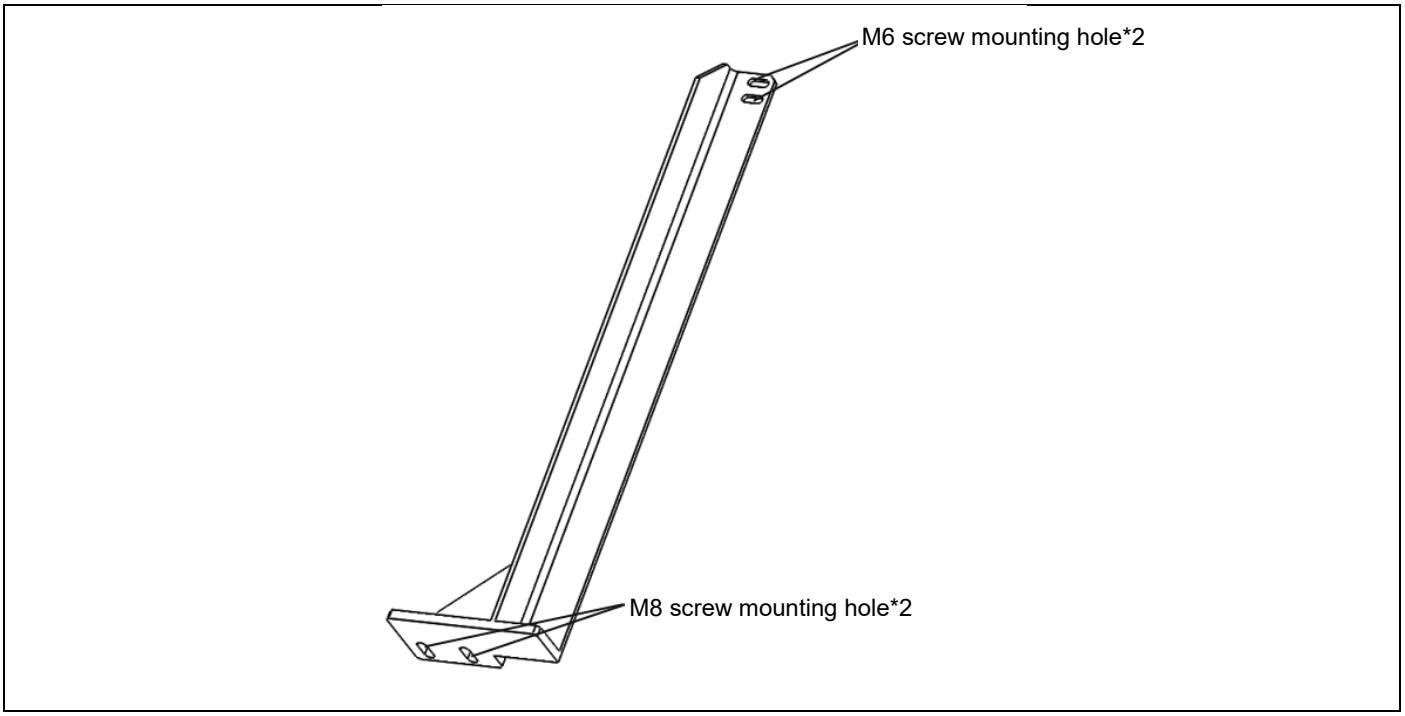

Fig 1.2 Robot fixed bracket(ER8-1500-CW)

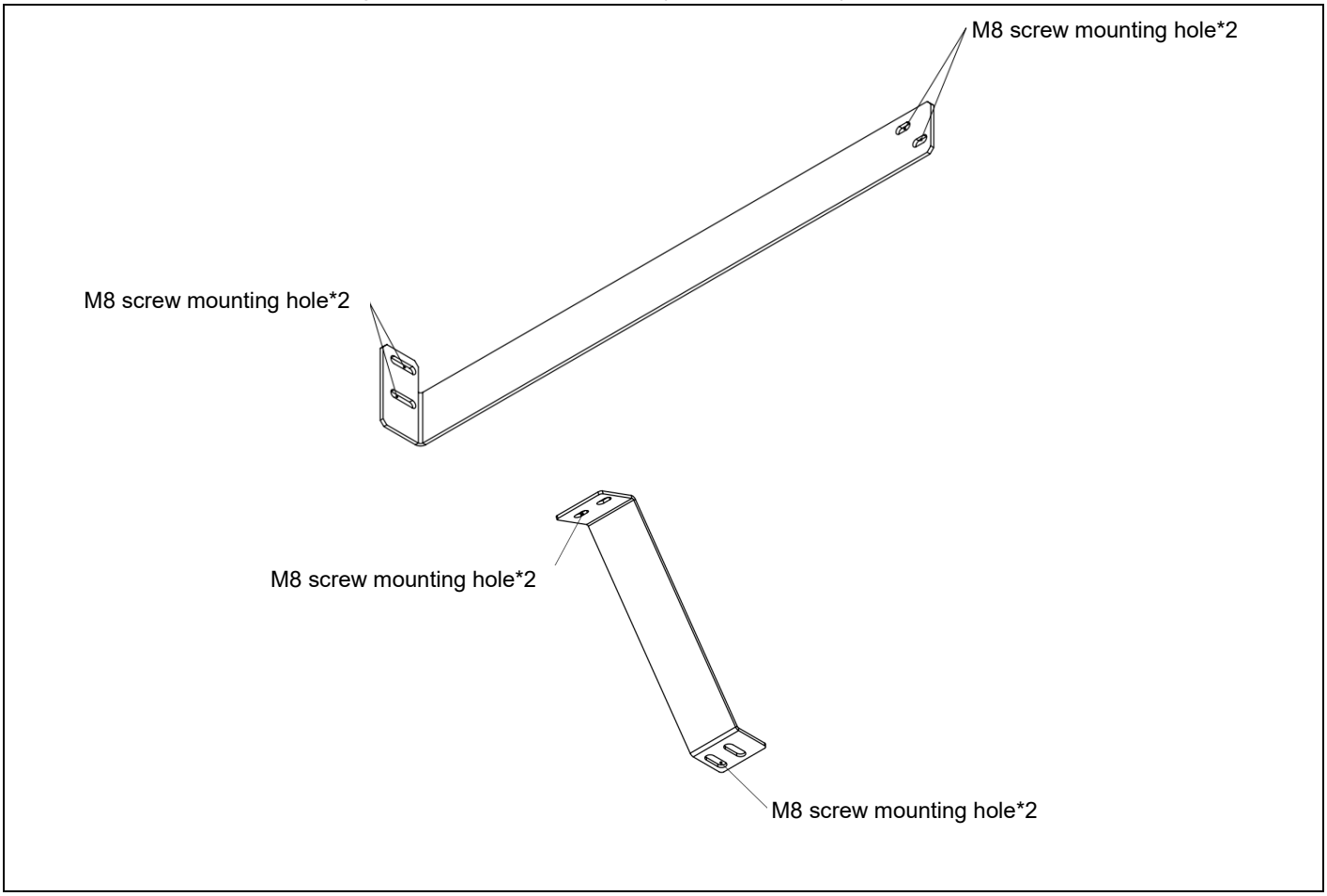

Fig 1.1 Robot fixed bracket（ER8-2000-CW）

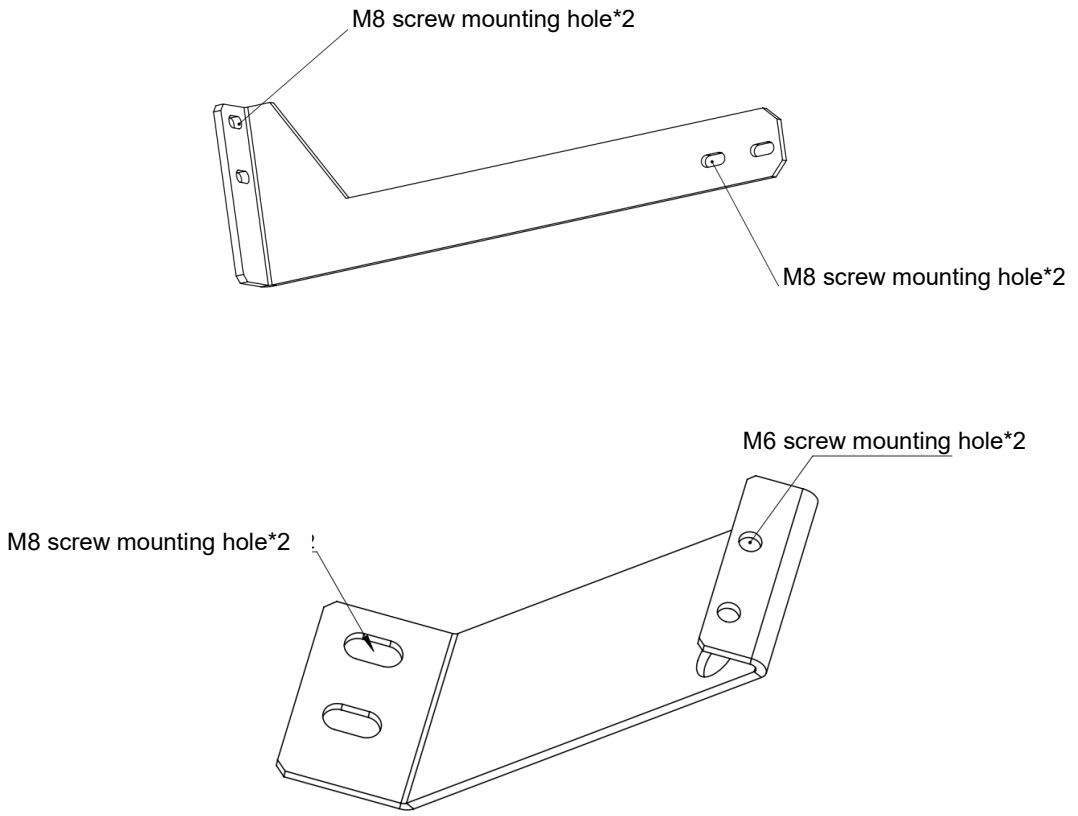

Fig 1.2 Robot fixed bracket（ER8-2000-HW、ER8-2000-HW-T）

1.1.1.Transport by a forklift

The robot described in this manual can be transported by a forklift. Use eight bolts to fix the 4 fixed plates on the forklift to the robot base, use a forklift to heave the robot. Make sure that the fixed bolts of the robot are removed before transportation.

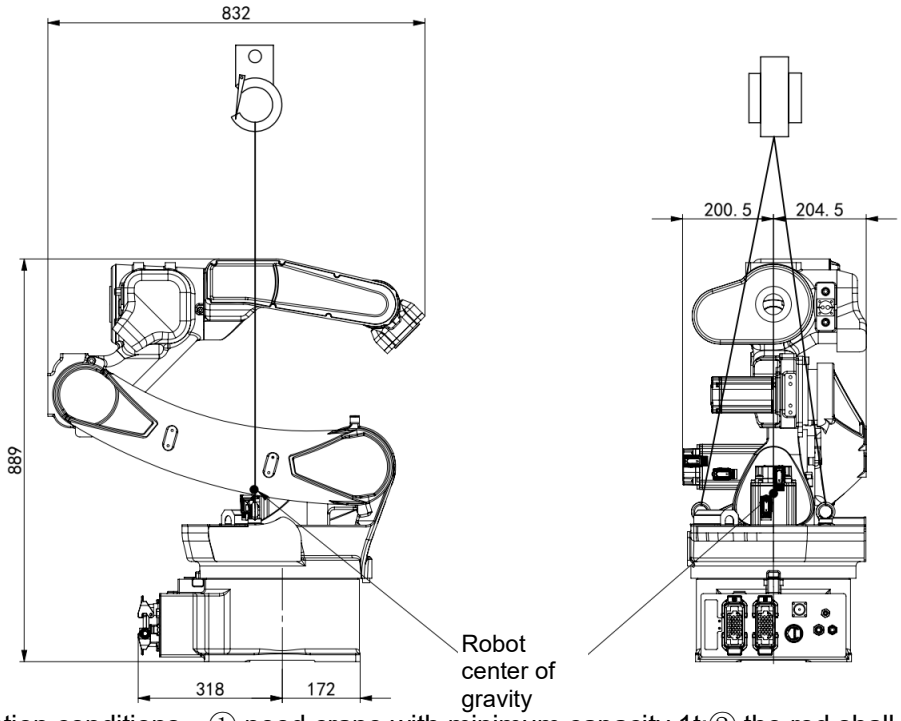

Notes：Transportation conditions：① need crane with minimum capacity 1t;② the rod shall has capacity of 500kg;③ according to Standard GB/T825-1988. ④M12 bolt

Fig 1.5 The robot lifting and transportation instructions(ER8-1450-HW)

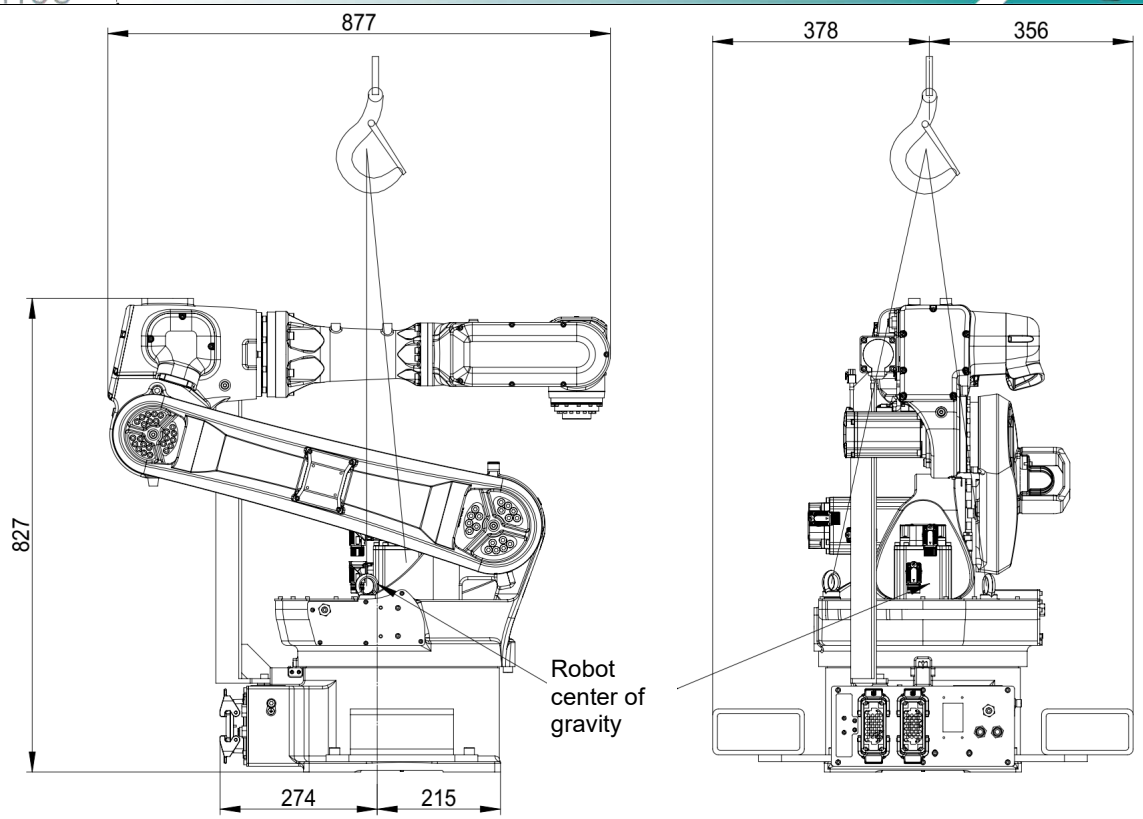

Notes：Transportation conditions：① need crane with minimum capacity 1t;② the rod shall has capacity of 500kg;③ according to Standard GB/T825-1988. ④M16 bolt

Fig 1.6 The robot lifting and transportation instructions(ER8-1500-CW)

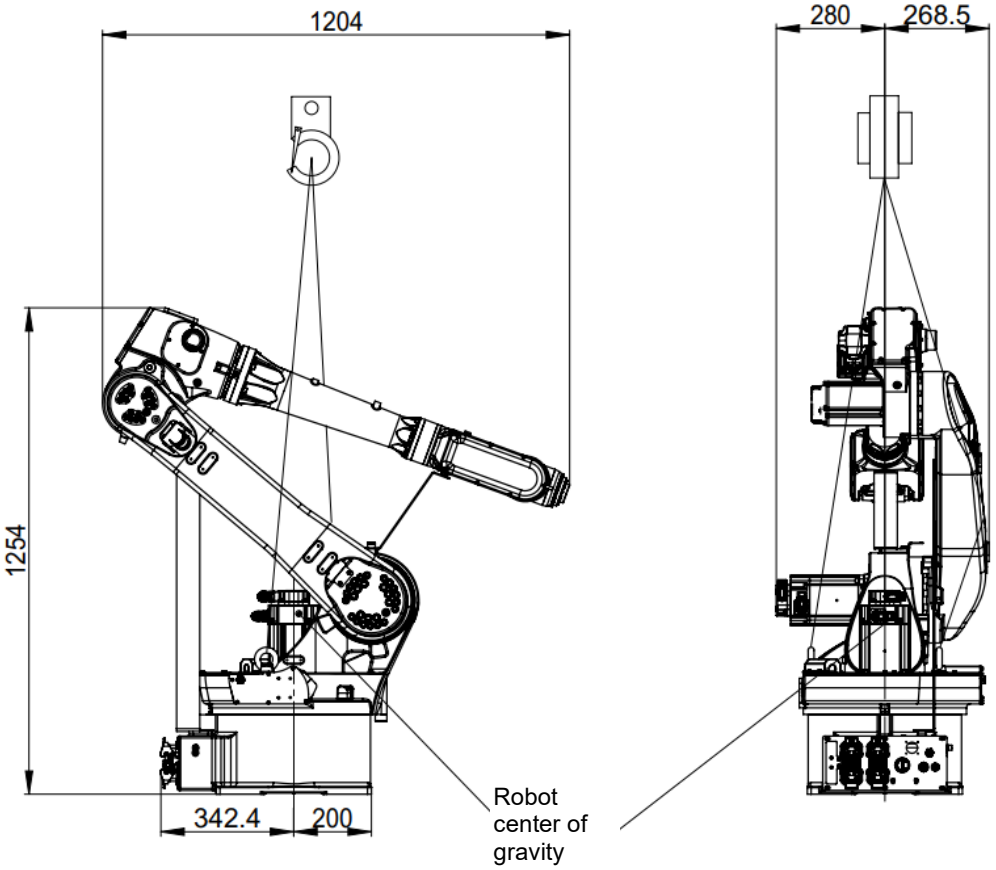

Notes：Transportation conditions：① need crane with minimum capacity 1t;② the rod shall has capacity of 500kg;③ according to Standard GB/T825-1988. ④M16 bolt

Fig 1.7 The robot lifting and transportation instructions(ER8-2000-CW)

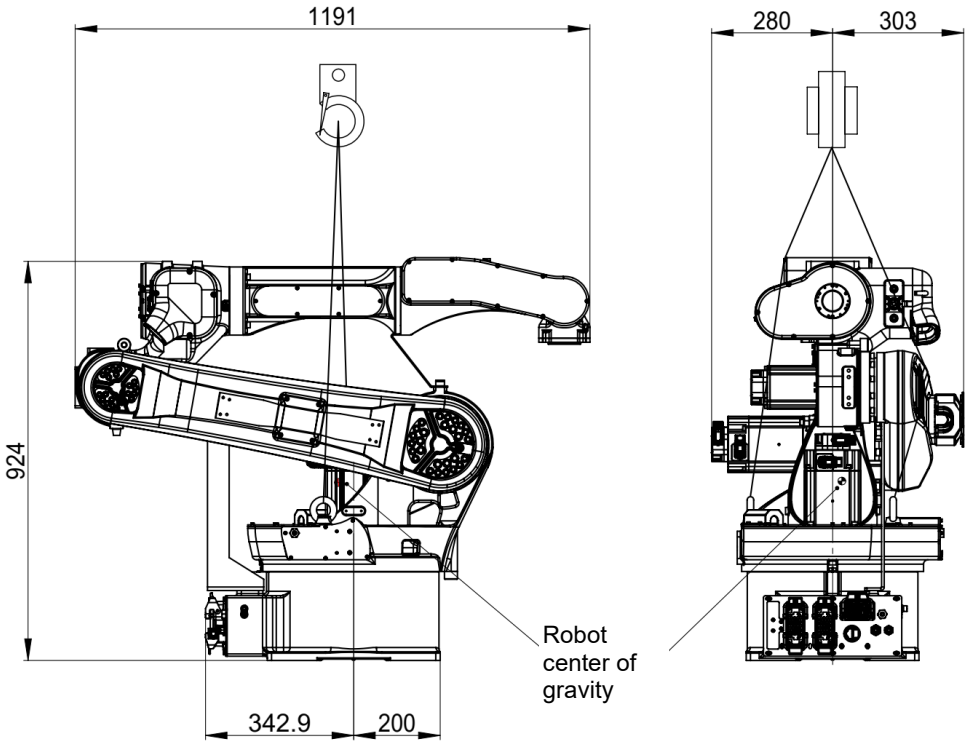

Notes：Transportation conditions：① need crane with minimum capacity 1t;② the rod shall has capacity of 500kg;③ according to Standard GB/T825-1988. ④M16 bolt

Fig 1.8 The robot lifting and transportation instructions(ER8-2000-HW、ER8-2000-HW-T)

CAUTION

The sling shall be suppled by the customer. Please remove the sling bolts before running the body.

1.2 INSTALLATION

CAUTION

Make sure the system is properly grounded before installation.

The following precautions must be fully understood and observed before installing the robot.

- Ensure that the information in the Safe Use Notice has been read and understood;
- Ensure that robots are installed by qualified installers and that installation procedures comply with local legal rules;
- Check whether the outer packaging of the robot is bumped or damaged; Unpack the robot and check whether the robot product is damaged from the appearance;
- Ensure that when installing the robot, the lifting equipment can bear the weight of the lifting robot parts, see 1.1 Handling;
- The environmental conditions of robot storage and installation must meet the 1.3 installation conditions.

When mounting the robot base, consider its structure and the force upon it. Concrete on the base may not have any crack and conform to the specified codes. The bearing capacity and compaction of the concrete foundation should be in accordance with the design guideline. Concrete strength level C20/C25 should be in accordance with the following codes:

- GB50010-2010 Code for design of concrete structures
- GB/T50081-2002 Standard for test method of mechanical properties on ordinary concrete

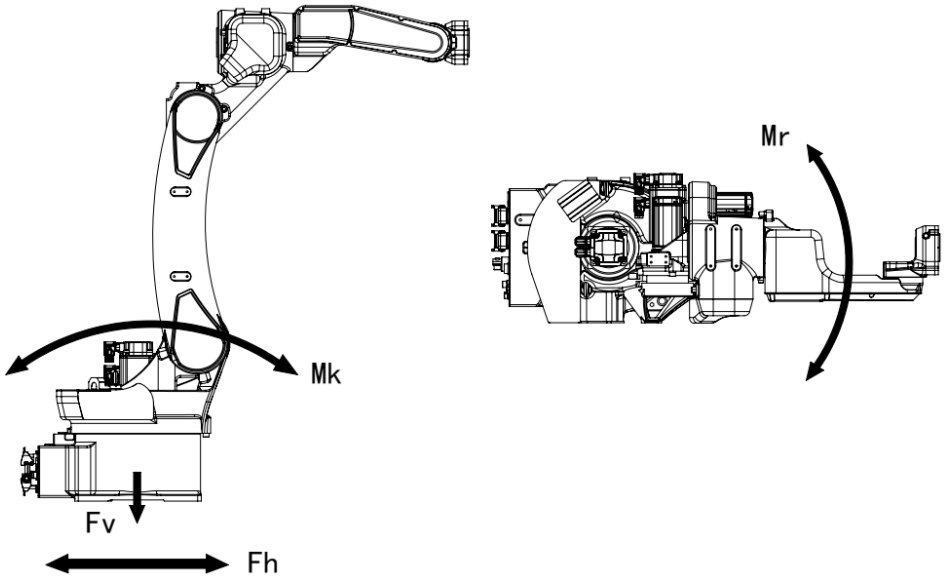

	Rotate horizontally		Rotate vertically	
	Horizontal force Fh	Torque Mr	Vertical force Fv	Torque Mk
Emergency stop	4800 N	3750 N·m	5750N	4165N·m
Accelerating	1600N	1250N·m	2300N	1666N·m

Fig 1.9 Robot base specification(ER8-1450-HW)

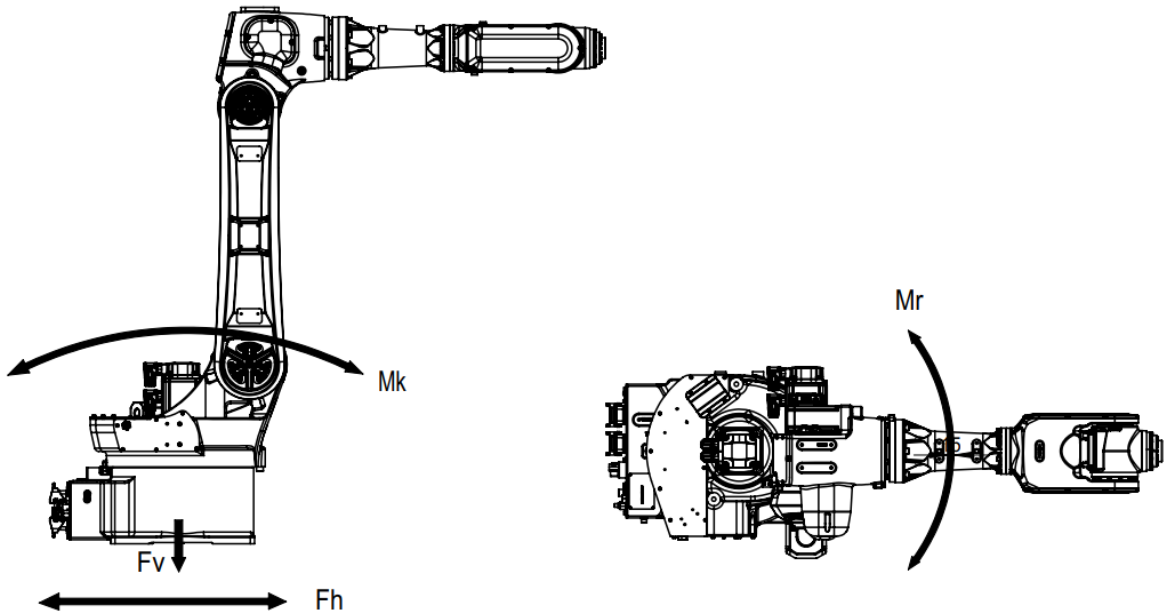

	Rotate horizontally		Rotate vertically	
	Horizontal force Fh	Torque Mr	Vertical force Fv	Torque Mk
Emergency stop	4800 N	3750 N·m	5500N	4165N·m
Accelerating	1600N	1250N·m	2200N	1666N·m

Fig 1.10 Robot base specification(ER8-1500-CW)

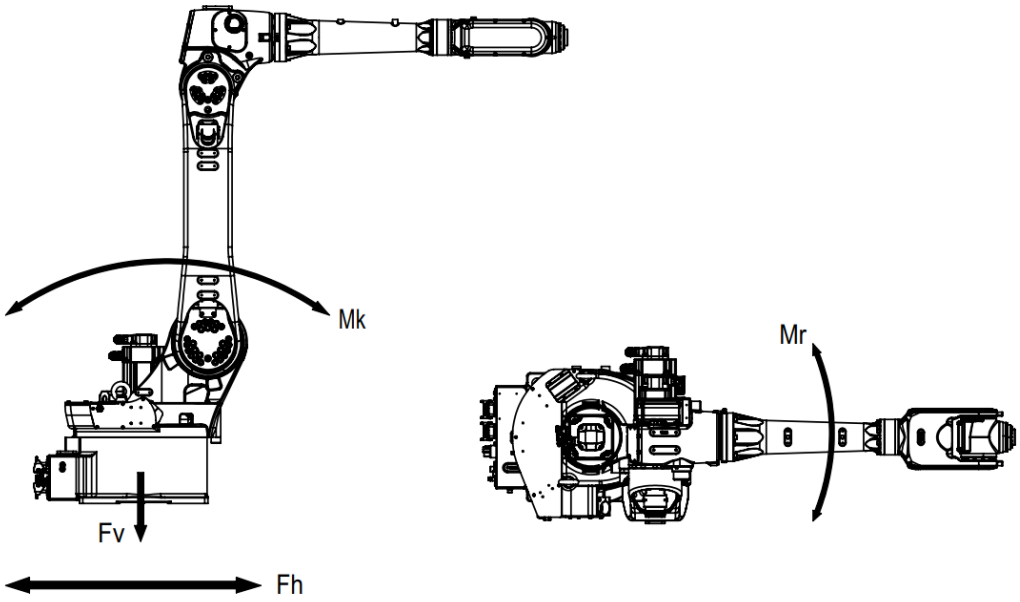

	Rotate horizontally		Rotate vertically	
	Horizontal force Fh	Torque Mr	Vertical force Fv	Torque Mk
Emergency stop	10800 N	9900 N·m	11500N	8575N·m
Accelerating	3600N	3300N·m	4600N	3430N·m

Fig 1.11 Robot base specification(ER8-2000-CW)

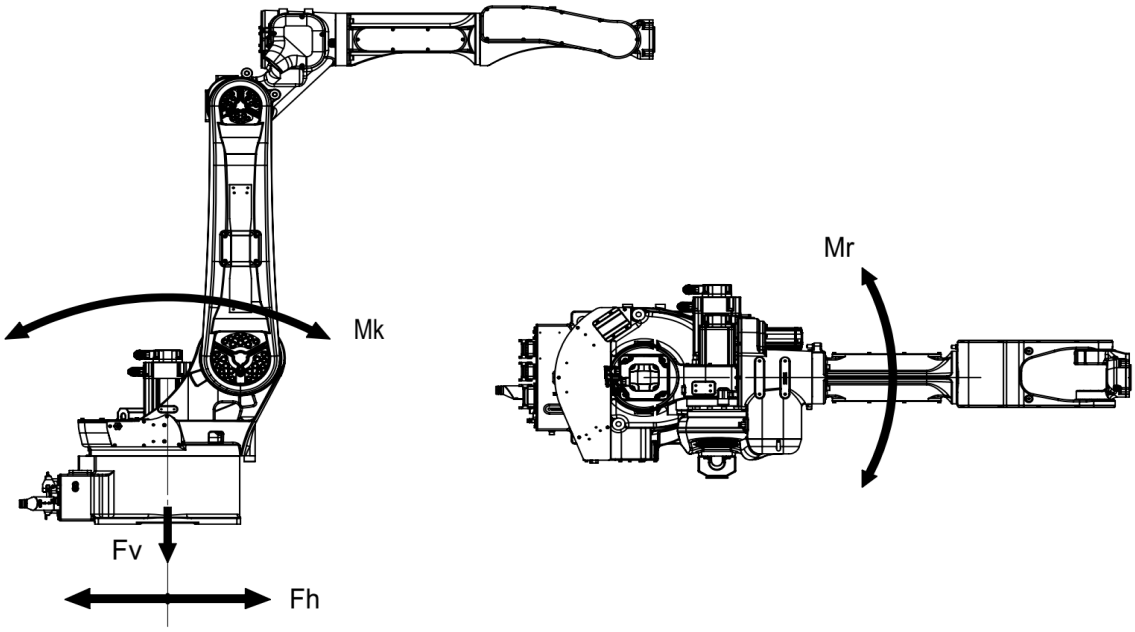

	Rotate horizontally		Rotate vertically	
	Horizontal force Fh	Torque Mr	Vertical force Fv	Torque Mk
Emergency stop	11700 N	9900 N·m	11750N	8575N·m
Accelerating	3900N	3300N·m	4700N	3430N·m

Fig 1.12 Robot base specification(ER8-2000-HW、ER8-2000-HW-T)

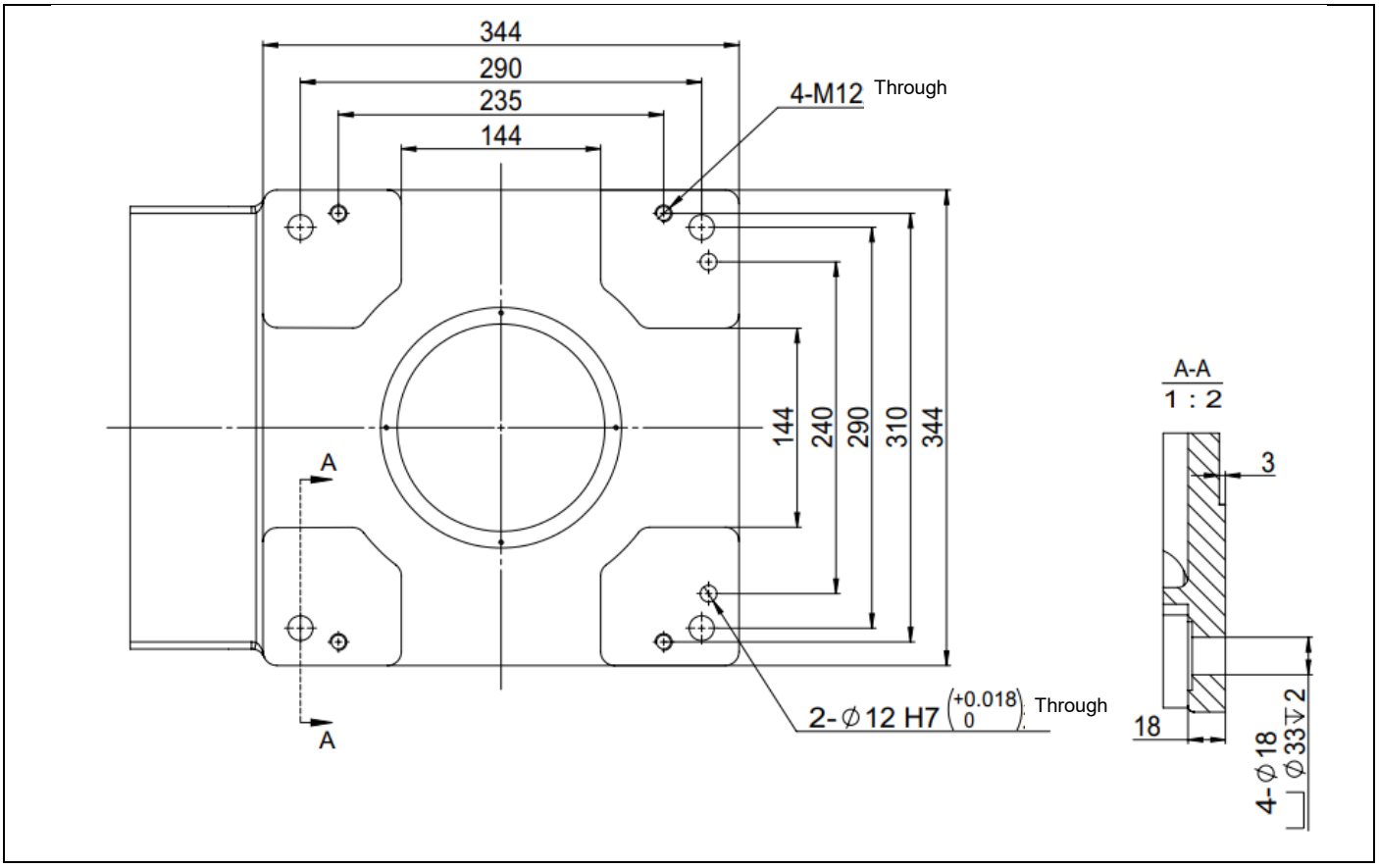

Fig 1.13 Robot base mounting dimension(ER8-1450-HW、ER8-1500-CW)

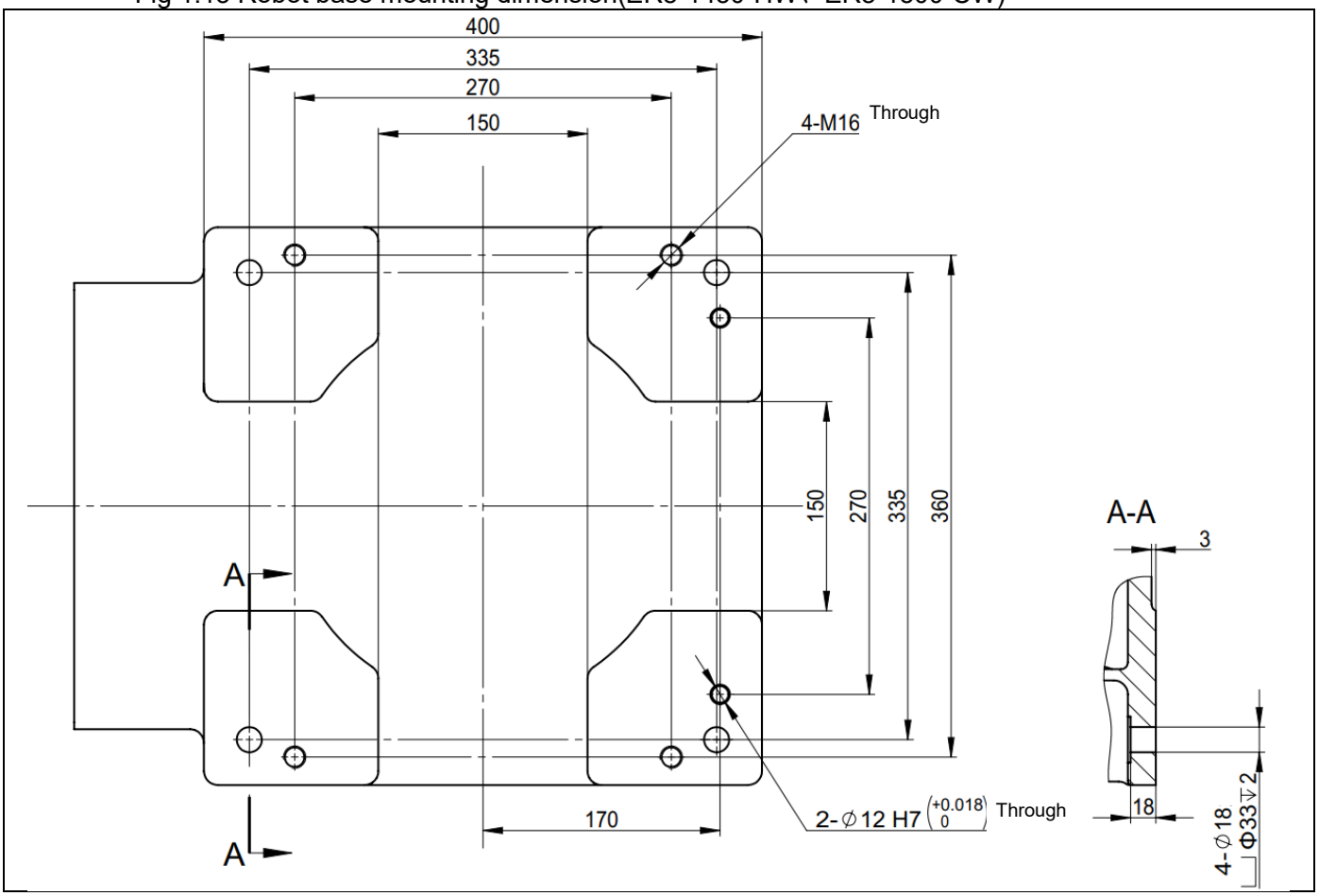

Fig 1.14 Robot base mounting dimension(ER8-2000-CW、ER8-2000-HW、ER8-2000-HW-T)

CAUTION

Use 8-M12 threaded hole on the base to fix the robot if necessary.

Tab 1.1 Robot fixing components

Item and model	Number
Fixed screw: M16X40 (GB/T 70.1 12.9 level)	4
Spring washer: Spring washer 16 (GB/T 93)	4
Positioning pin: Cylindrical pin 12X45 (GB/T120.2)	2

Tab 1.2 Robot fixing components

Item and model	Number
Fixed screw: M16X40 (GB/T 70.1 12.9 level)	4
Spring washer: Spring washer 16 (GB/T 93)	4
Flat washer16(GB/T 97.1)	4
Positioning pin: Cylindrical pin 12X45 (GB/T120.2)	2

Tab 1.3 Robot fixing components

Item and model	Number
Fixed screw: M16X45 (GB/T 70.1 12.9 level)	4
Spring washer: Spring washer 16 (GB/T 93)	4
Flat washer16(GB/T 97.1)	4
Positioning pin: Cylindrical pin 12X45 (GB/T120.2)	2

IN FO	**Positioning pin can reduce the influence on current program caused by re-installation or replacement of the robot. If the recovery of programmed path is needed, perform adjustment. If not, positioning pin can be eliminated.**

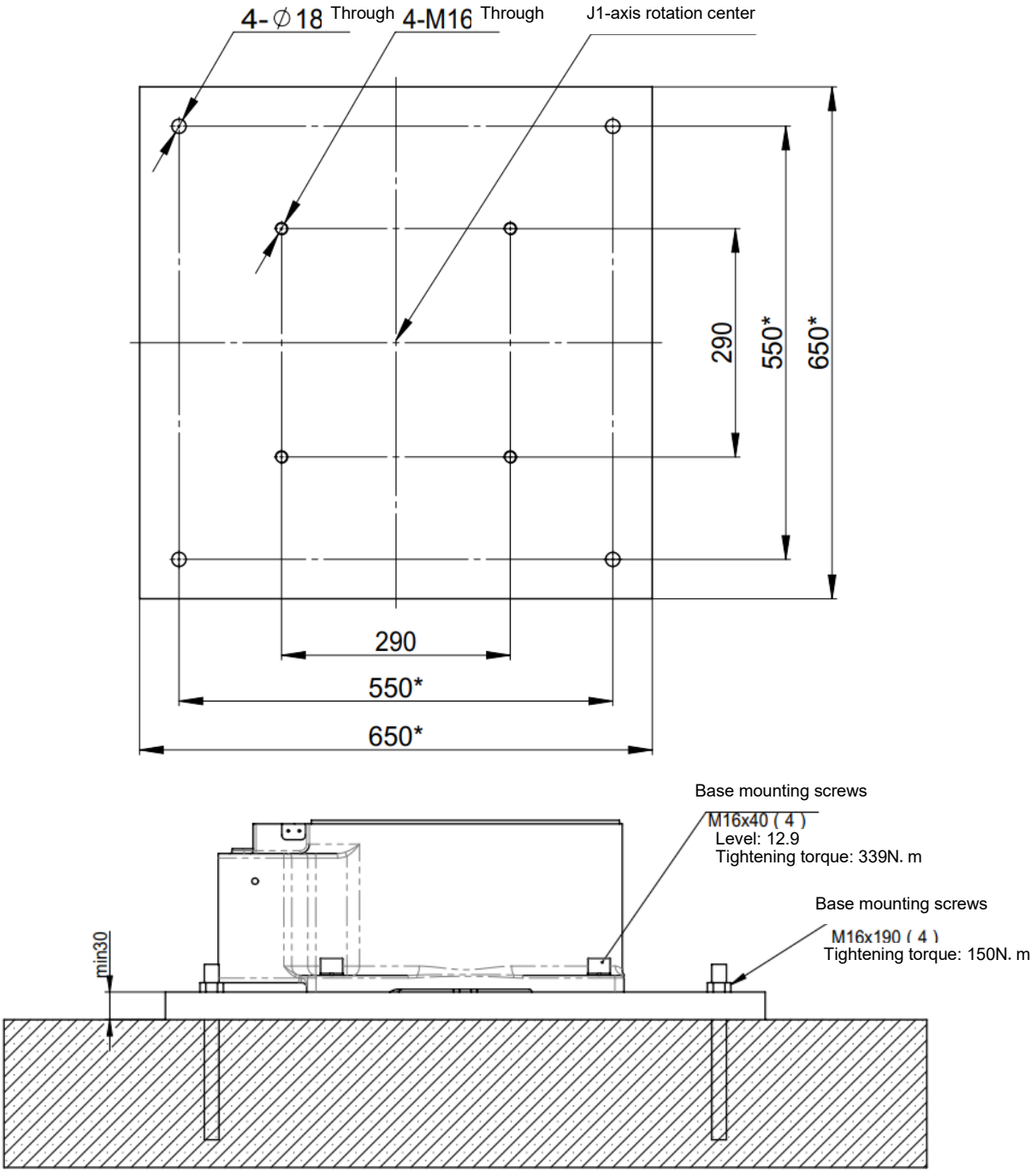

Note: use four M16x190 chemical bolts to fix the mounting plate on the concrete floor. The thickness of the concrete should be no less than 160mm, effective area no less than 1000mmx1000mm. Fix the robot base with parts shown in the table above. The dimension with a * is recommended. A strict calculation based on the force upon the base and the structure of the base must be performed before any change of these dimensions.

Fig 1.15 ER8-1450-H Robot mounting plate dimension and mounting method

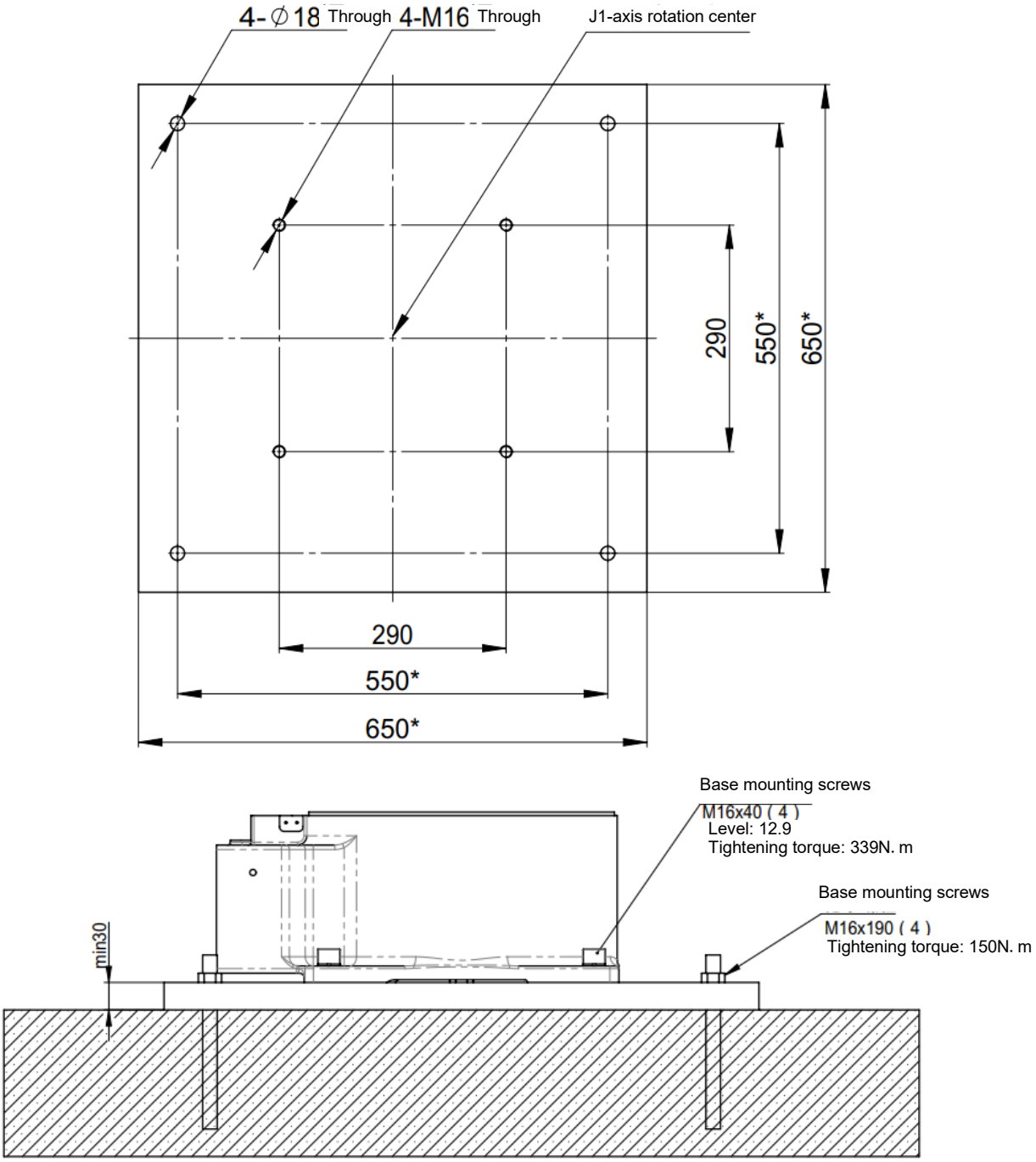

Note: use four M16x190 chemical bolts to fix the mounting plate on the concrete floor. The thickness of the concrete should be no less than 160mm, effective area no less than 1000mmx1000mm. Fix the robot base with parts shown in the table above. The dimension with a * is recommended. A strict calculation based on the force upon the base and the structure of the base must be performed before any change of these dimensions.

Fig 1.16 ER8-1450-H Robot mounting plate dimension and mounting method

1.3 INSTALLATION CONDITIONS

CAUTION	**Damage of the cable jacket can cause water intrusion. Take care when installing the cable and exchange if it is damaged.**

See the table below about installation conditions. Robot storage conditions are also listed in case that the robot needs to be stored for a period of time.

Foundation	
Max. surface roughness	0.5mm
Max. inclination angle	5°
Storage condition	
Min. ambient temperature	-25℃
Max. ambient temperature	+55℃
Max. humidity	95%RH
Protection level	
ER8-1450-HW ER8-1500-CW ER8-2000-CW ER8-2000-HW ER8-2000-HW-T	IP54

Performance of resistant chemicals and resistant solvents.

(1)The robot (including severe dust/liquid protection model) cannot be used with the following liquids. Potentially these liquids will cause irreversible damage to the rubber parts (such as gaskets, oil seals, O-rings etc.). (As exception to this only liquids tested and approved by ESTUN can be used with the robot).
(a)Organic solvents
(b)Cutting fluid including chlorine/gasoline
(c)Amine type detergent
(d)Acid, alkali and liquid causing rust
(e)Other liquids or solutions, that will harm NBR or CR rubber

(2)When the robots work in the environment, using water or liquid, complete draining of J1 base must be done. Incomplete draining of J1base will make the robot break down.

(3)Do not use unconfirmed liquid.

(4)Do not use the robot immersed in water, neither temporary nor permanent. Robot must not be wet permanently. Example: in case motor surface is exposed to water for a long time, liquid may invade inside the motor and cause failure.

2.CONNECTION WITH THE CONTROLLER

The figure below shows the cables connect the robot with the controller. Connect these cables on the back of the base.

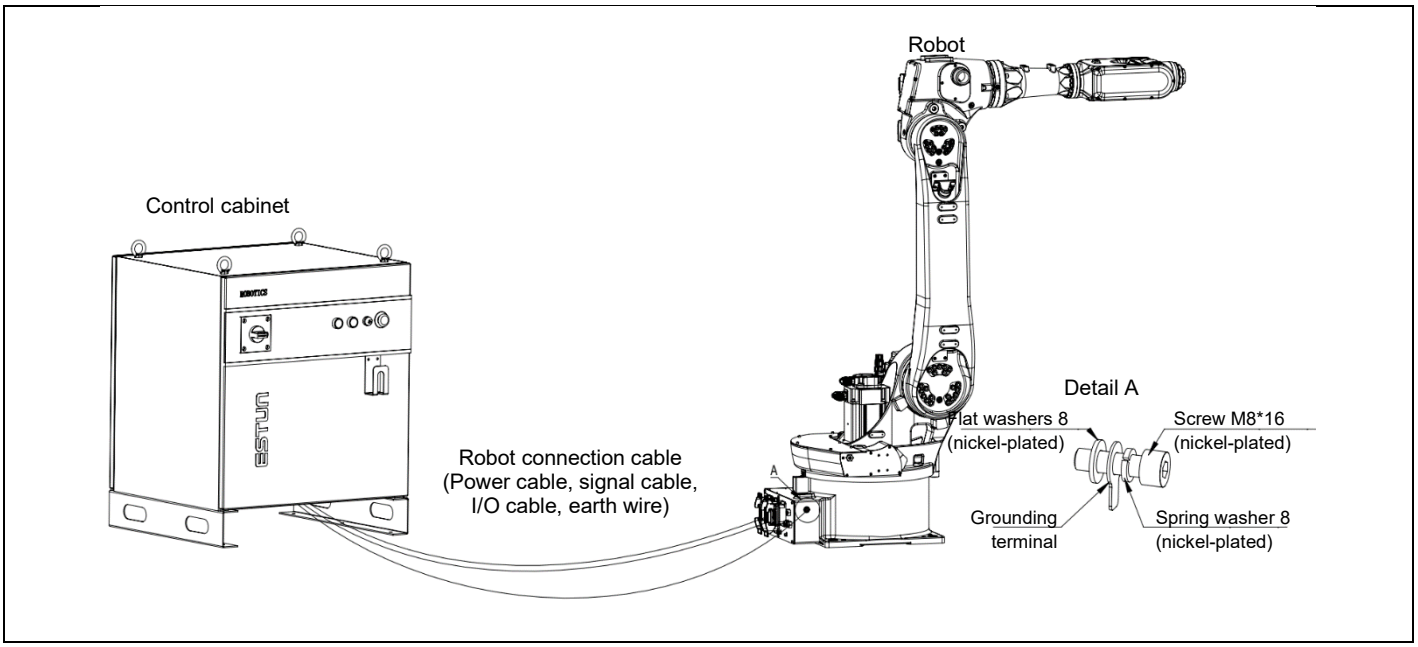

Fig 2.1 Cable connection

CAUTION	**1. It is essential to ensure that the serial number of the robot body matches the serial number of the control cabinet. Mismatched serial numbers can result in deviation in robot accuracy.** **2. Before turning on the power supply to the control device, please connect the robot and the control device with a grounding wire. There is a risk of electric shock if the grounding wire is not connected.** **3. Install the grounding terminal between the flat washer and the spring washer. The grounding position of the robot may have a small amount of anti-rust oil, so please clean it properly before grounding.**

3.SPECIFICATIONS

3.1 ROBOT CONFIGURATION

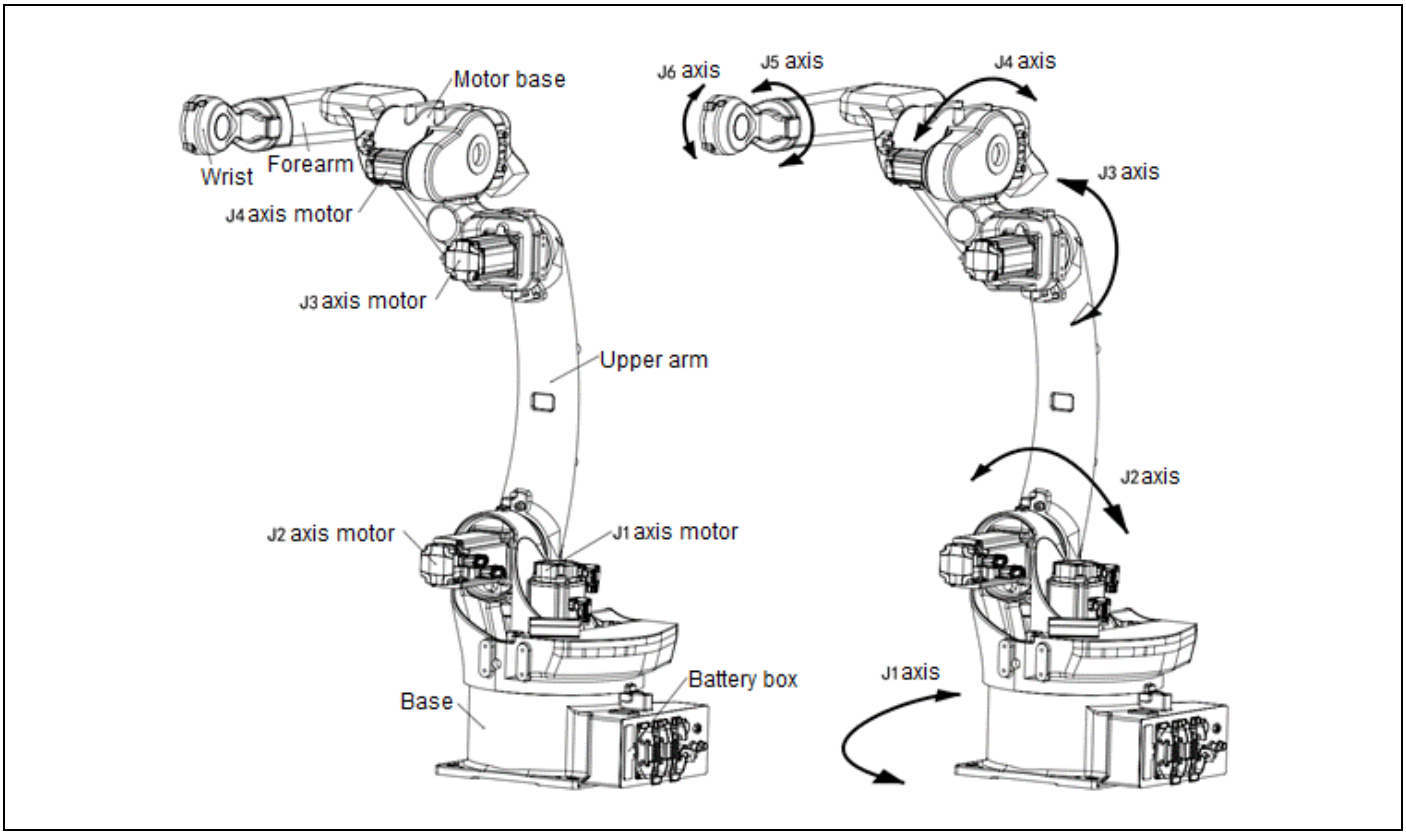

Fig 3.1 The composition of robots（ER8-1450-HW）

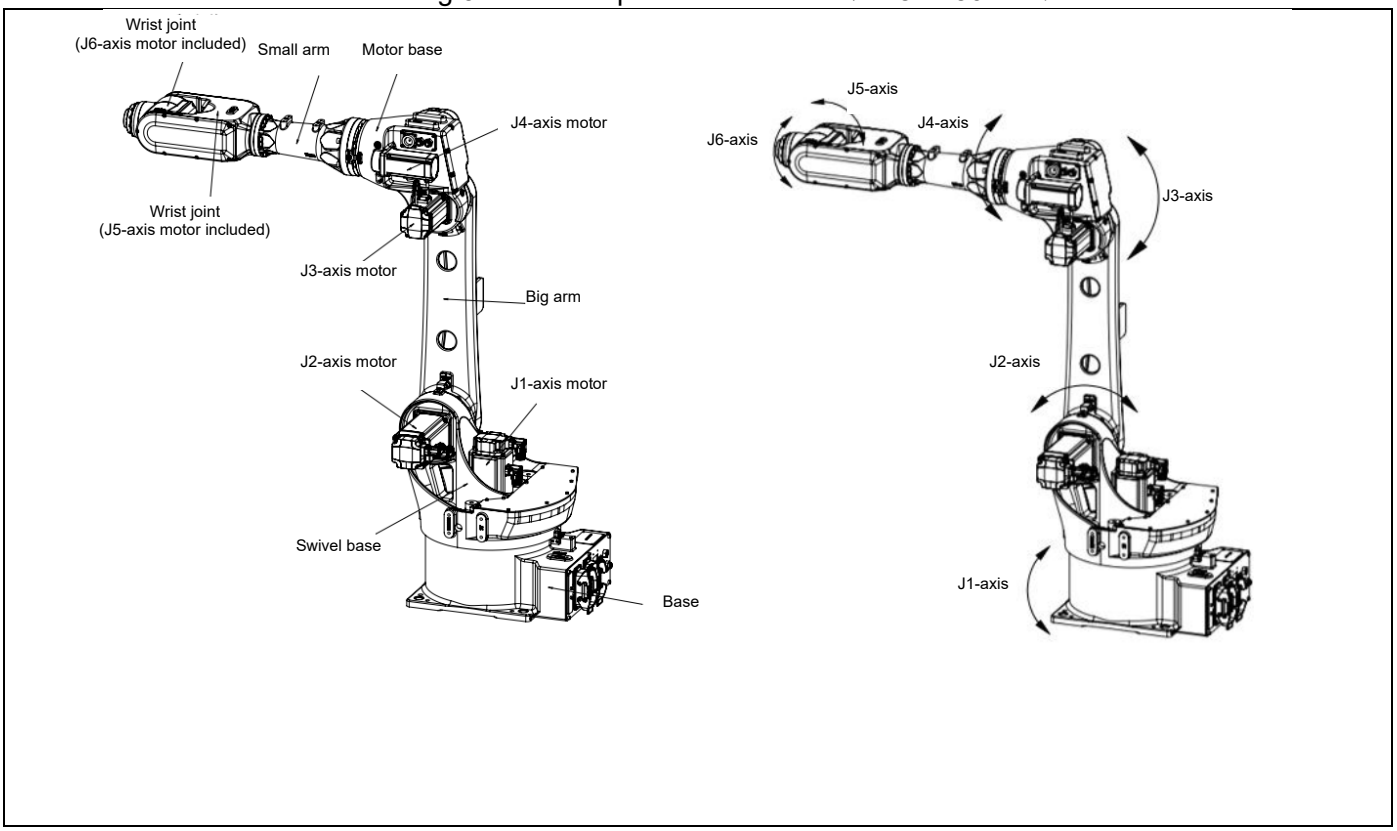

Fig 3.2 The composition of robots（ER8-1500-CW）

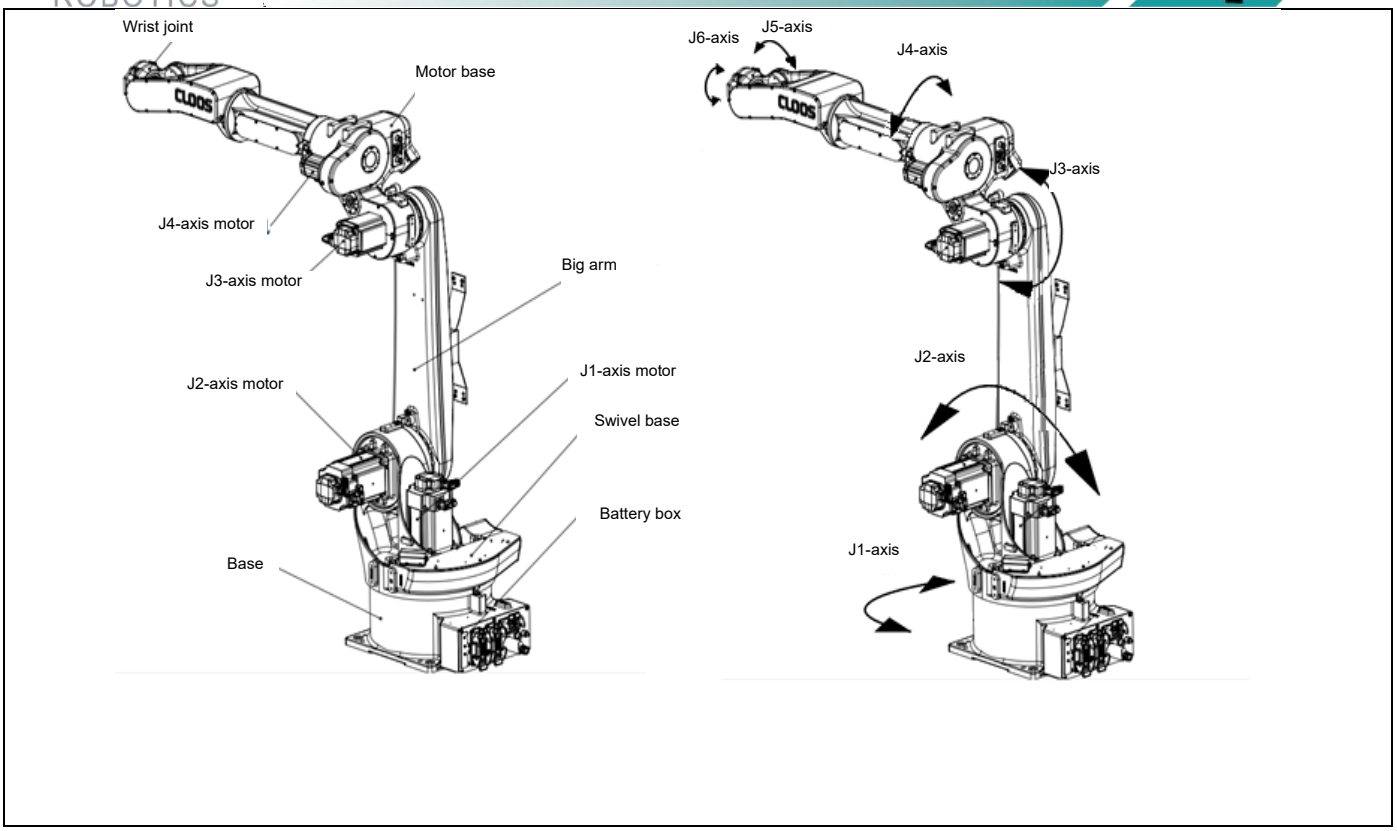

Fig 3.3 The composition of robots（ER8-2000-HW、ER8-2000-HW-T）

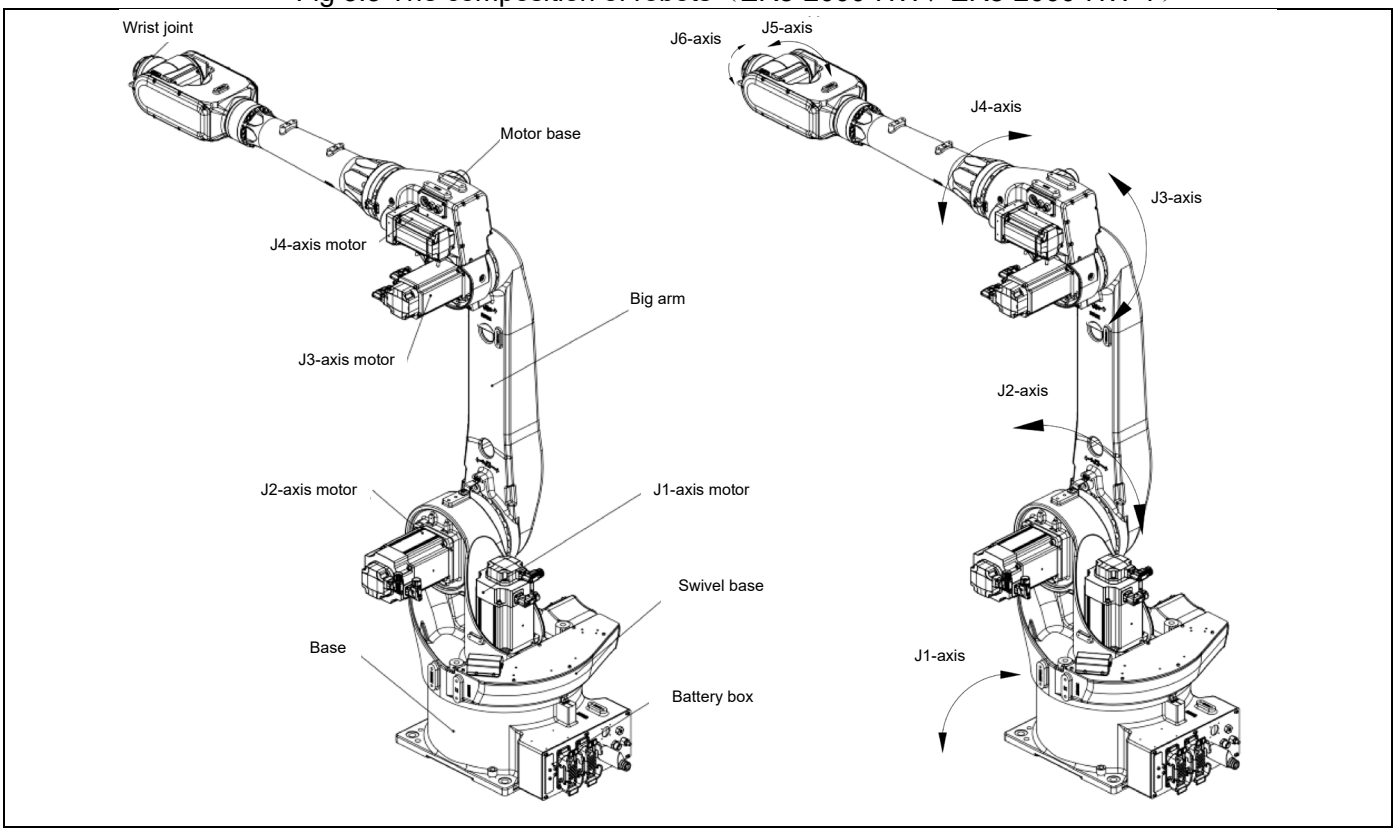

Fig 3.4 The composition of robots（ER8-2000-CW）

Tab 3.1 Robot Specification Table

Model		ER8-1450-HW	ER8-1500-CW	ER8-2000-CW
Type		Articulated robot		
Controlled axis		6-axis（J1，J2，J3，J4，J5，J6）		
Installation		floor/top	Floor	
Allowable weight		8kg	8kg	8kg
Motion range	J1-axis	±170°	±170°	±170°
	J2-axis	-85°~ +160°	-90°~ +155°	-100°~ +155°
	J3-axis	-150°~ +85°	-145°~ +85°	-160°~ +86°
	J4-axis	±150°	±170°	±170°
	J5-axis	±135°	±135°	±135°
	J6-axis	±210°	±360°	±360°
Max. speed (Note 1)	J1-axis	240°/s	242°/s	180°/s
	J2-axis	240°/s	242°/s	180°/s
	J3-axis	260°/s	283°/s	242°/s
	J4-axis	440°/s	476°/s	480°/s
	J5-axis	400°/s	412°/s	412°/s
	J6-axis	700°/s	685°/s	705°/s
Allowable load inertia at wrist	J4-axis	0.38 kg·m^2	0.38 kg·m^2	0.46 kg·m^2
	J5-axis	0.38 kg·m^2	0.38 kg·m^2	0.46 kg·m^2
	J6-axis	0.08 kg·m^2	0.08 kg·m^2	0.08 kg·m^2
Allowable torque at wrist	J4-axis	15.6（N.m）	15.6（N.m）	17.4（N.m）
	J5-axis	15.6（N.m）	15.6（N.m）	17.4（N.m）
	J6-axis	6.3（N.m）	6.3（N.m）	6.04（N.m）
Drive method		Electric servo drive by AC servo motor		
Repeatability		±0.08mm	±0.05mm	±0.05mm
Max. reach		1445mm	1527mm	2010mm
Weight		170kg	165kg	281kg
Installation environment		Ambient temperature: 0～45℃ (Note 2) Ambient humidity: 20~80%RH Height: Up to 1000 meters above the sea level required Vibration acceleration: 4.9m/s2 (0.5G) or less Free of corrosive gases (Note 3)		

Tab 3.1 Robot Specification Table

Model		ER8-2000-HW	ER8-2000-HW-T
Type		Articulated robot	
Controlled axis		6-axis（J1，J2，J3，J4，J5，J6）	
Installation		floor/top	floor/top
Allowable weight		8kg	8kg
动作范围	J1-axis	±170°	±170°
	J2-axis	-100°~ +155°	-100°~ +155°
	J3-axis	-160°~ +86°	-160°~ +86°
	J4-axis	±150°	±150°
	J5-axis	±135°	±135°
	J6-axis	±210°	±210°
Max. speed (Note 1)）	J1-axis	180°/s	206°/s
	J2-axis	180°/s	206°/s
	J3-axis	241°/s	238°/s
	J4-axis	430°/s	442°/s
	J5-axis	400°/s	417°/s
	J6-axis	640°/s	700°/s
Allowable load inertia at wrist	J4-axis	0.38 kg·m^2	0.38 kg·m^2
	J5-axis	0.38 kg·m^2	0.38 kg·m^2
	J6-axis	0.08 kg·m^2	0.08 kg·m^2
Allowable torque at wrist	J4-axis	15.5（N.m）	15.5（N.m）
	J5-axis	15.5（N.m）	15.5（N.m）

	J6-axis	6.3（N.m）	6.3（N.m）
Drive method		Electric servo drive by AC servo motor	
Repeatability		±0.08mm	±0.08mm
Max. reach		2015mm	2015mm
Weight		286kg	286kg
Installation environment		Ambient temperature: 0～45℃ (Note 2) Ambient humidity: 20~80%RH Height: Up to 1000 meters above the sea level required Vibration acceleration: 4.9m/s2 (0.5G) or less Free of corrosive gases (Note 3)	

(Note 1) During short distance motions, the axis speed may not reach the maximum value stated.
(Note 2) When the robot is used in low temperature environment that is near 0℃ or not operated for a long time in the environment that is less than 0℃ in a holiday or the night, collision detection alarm may occur since the resistance of the drive mechanism could be high immediately after starting the operation. In this case, we recommend performing the warm up operation for several minutes.
(Note 3) Contact the service representative, if the robot is to be used in an environment or a place subjected to hot/cold temperatures, severe vibrations, heavy dust, cutting oil splash and or other foreign substances.

3.2 EXTERNAL DIMENSIONS AND OPERATING SPACE

The following figures illustrate the range of motion of the robot and serves as a reference for selecting and setting up the robot's installation position. When installing peripheral devices, it is important to ensure they do not interfere with the main body of the robot and its range of motion.

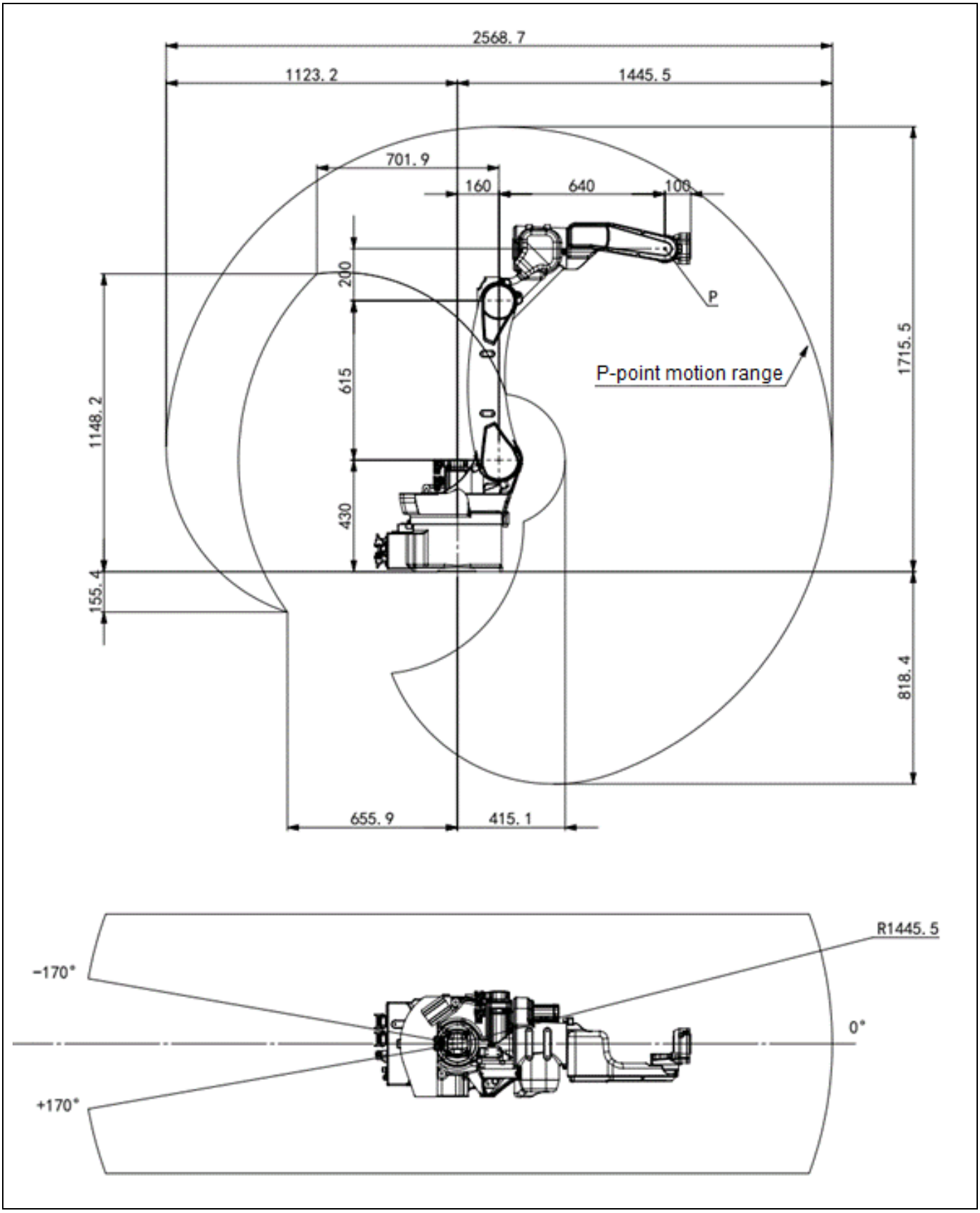

Fig 3.5 Motion range(ER8-1450-HW)

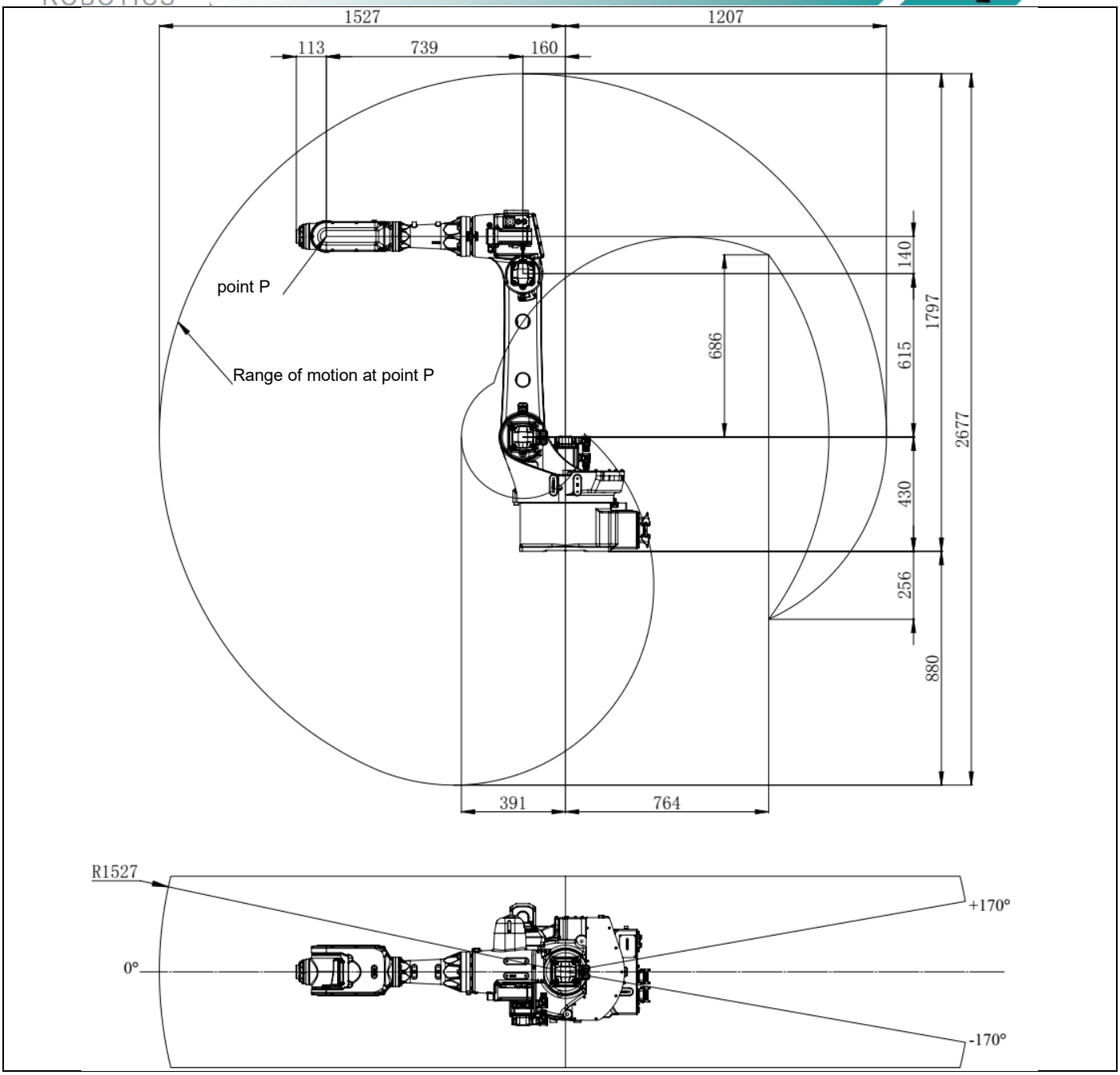

Fig 3.6 Motion range(ER8-1500-CW)

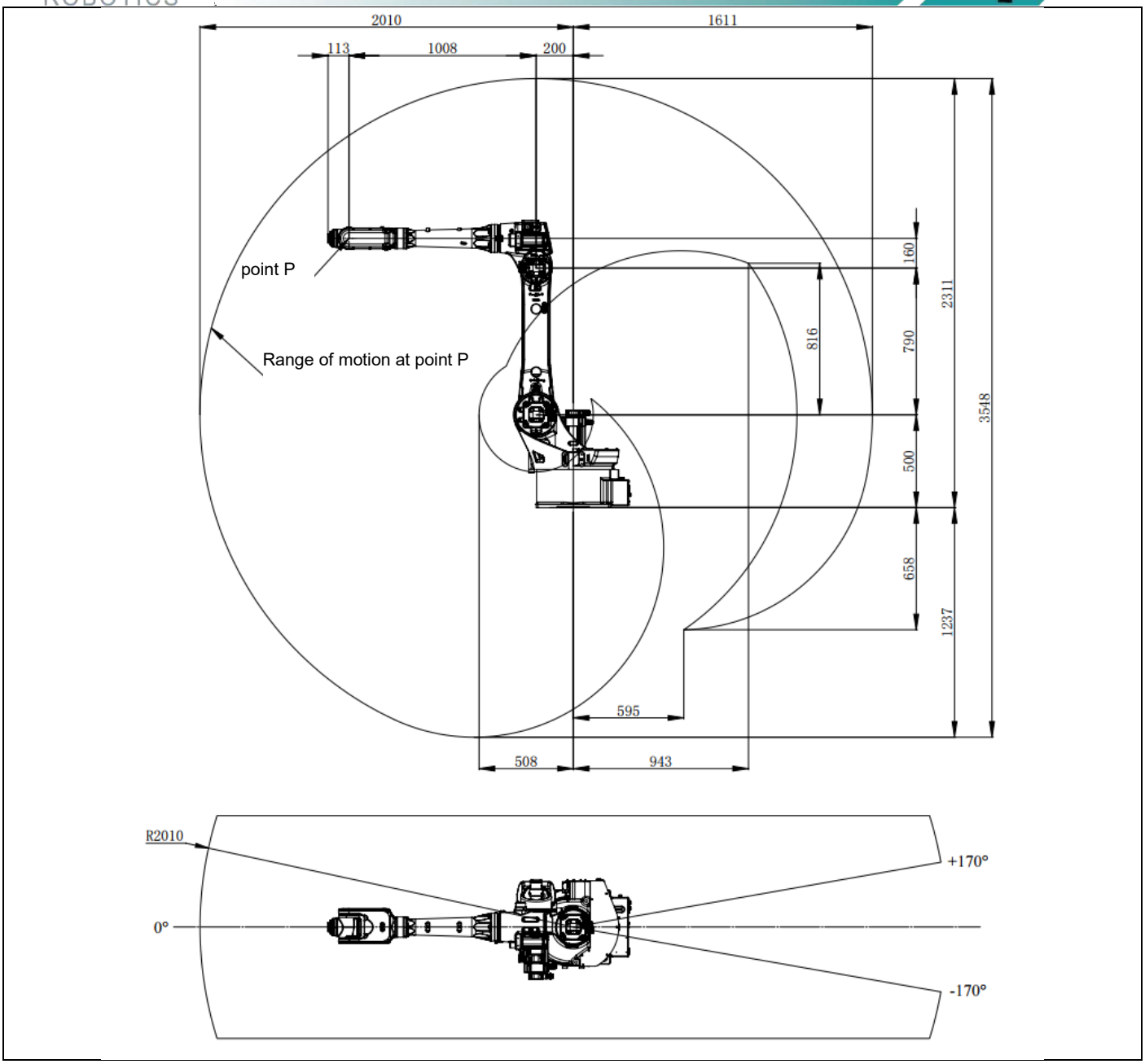

Fig 3.7 Motion range(ER8-2000-CW)

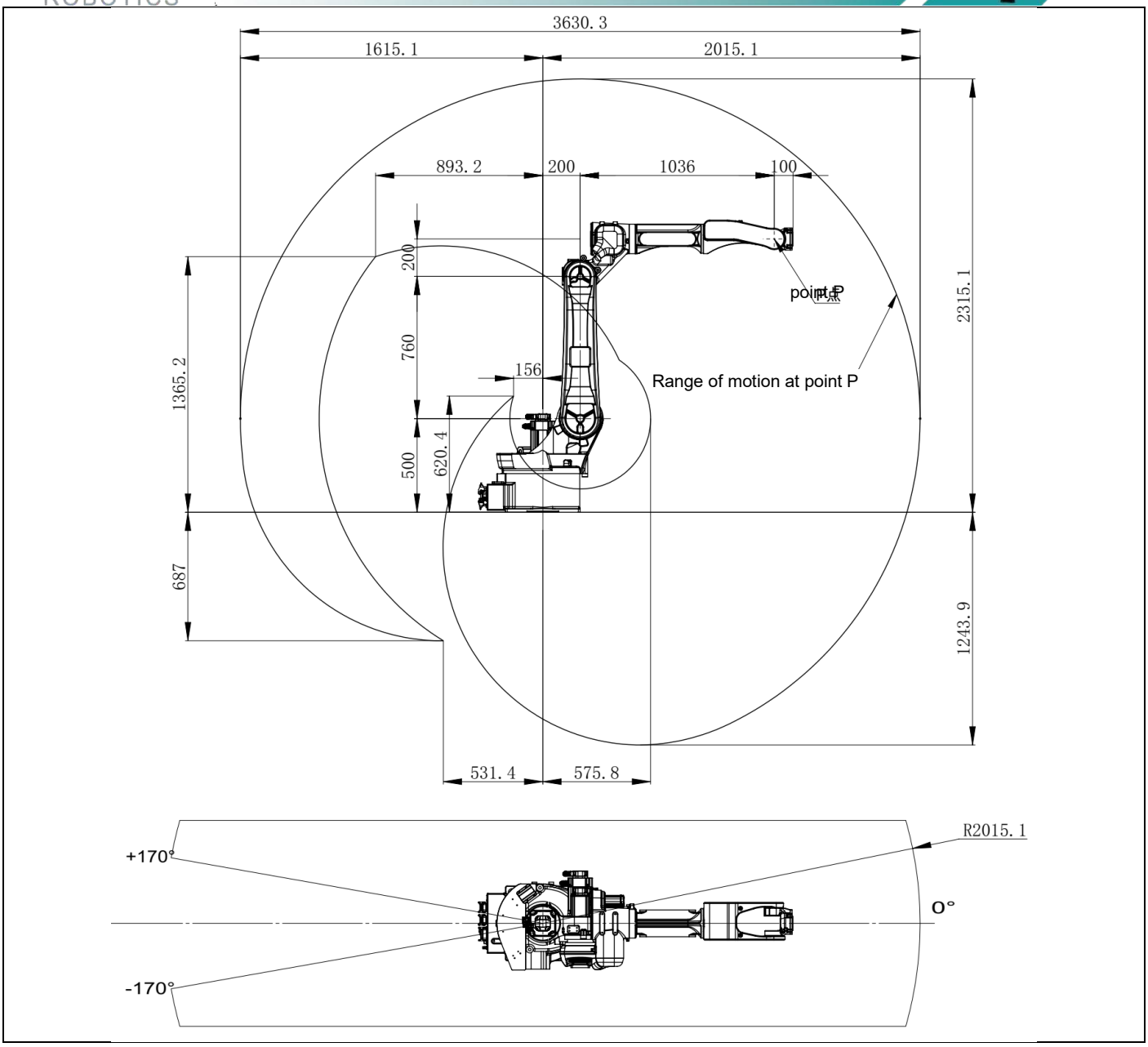

Fig 3.8 Motion range(ER8-2000-HW、ER8-2000-HW-T)

3.3 ZERO POINT POSITION AND MOTION LIMIT

Zero point and motion range are provided for each controlled axis. Exceeding the software motion limit of a controlled axis is called overtravel (OT). Overtravel is detected at both ends of the motion limit for each axis. The robot cannot exceed the motion range unless there is a loss of zero point position due to abnormalities in servo system or system error. In addition, the motion range limit by a fixed mechanical stopper is also prepared to improve safety.

CAUTION	**Do not reconstruct the fixed mechanical stopper. There is a possibility that the robot doesn't stop normally.**

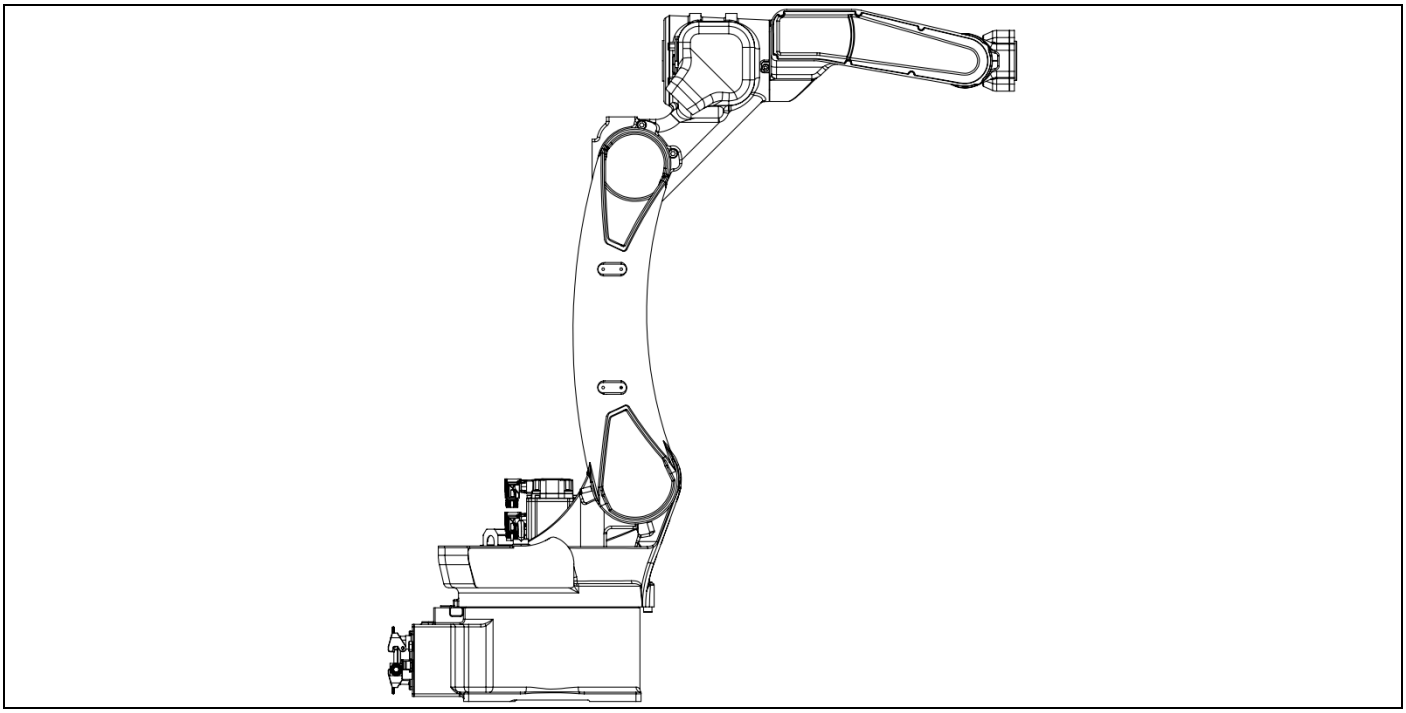

Fig 3.9 Zero point position （ER8-1450-HW）

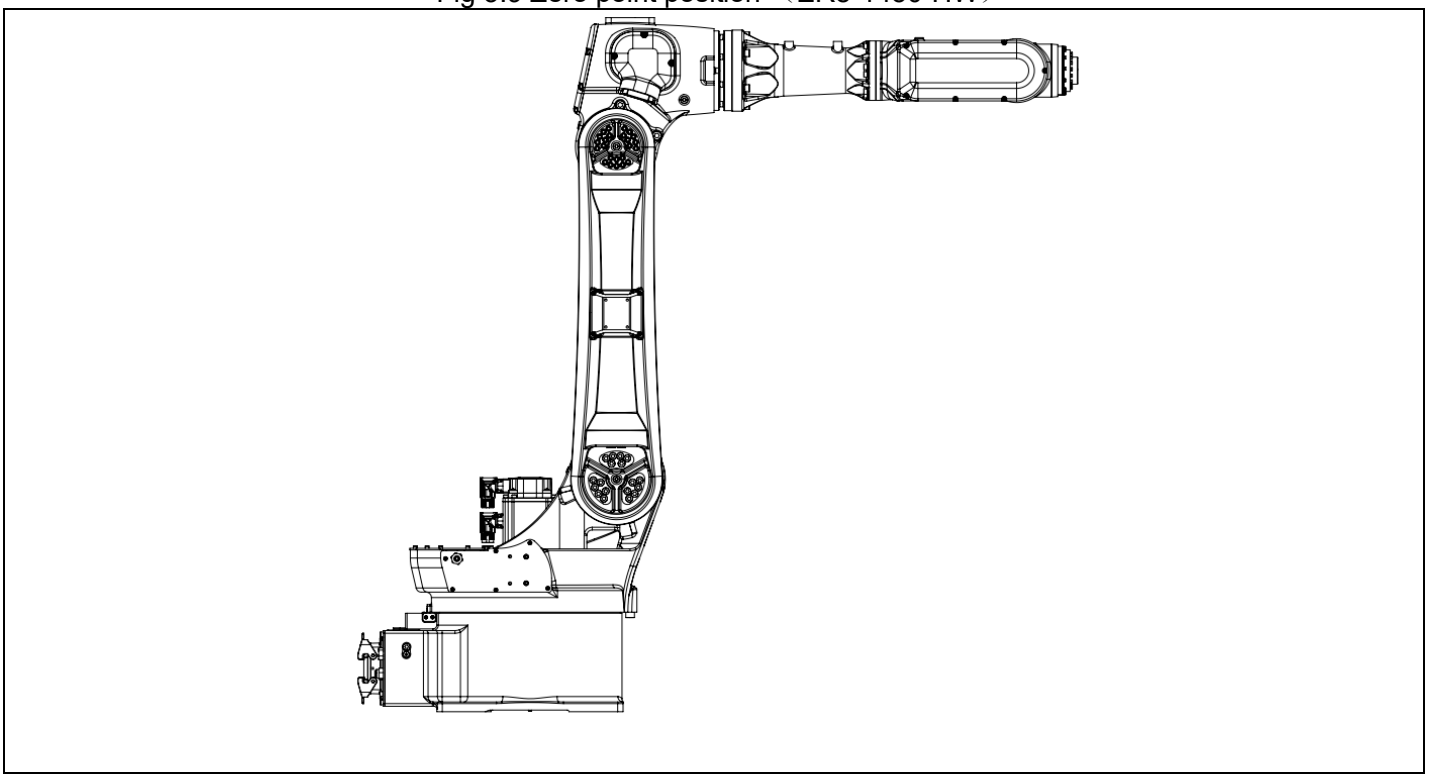

Fig 3.10 Zero point position （ER8-1500-CW）

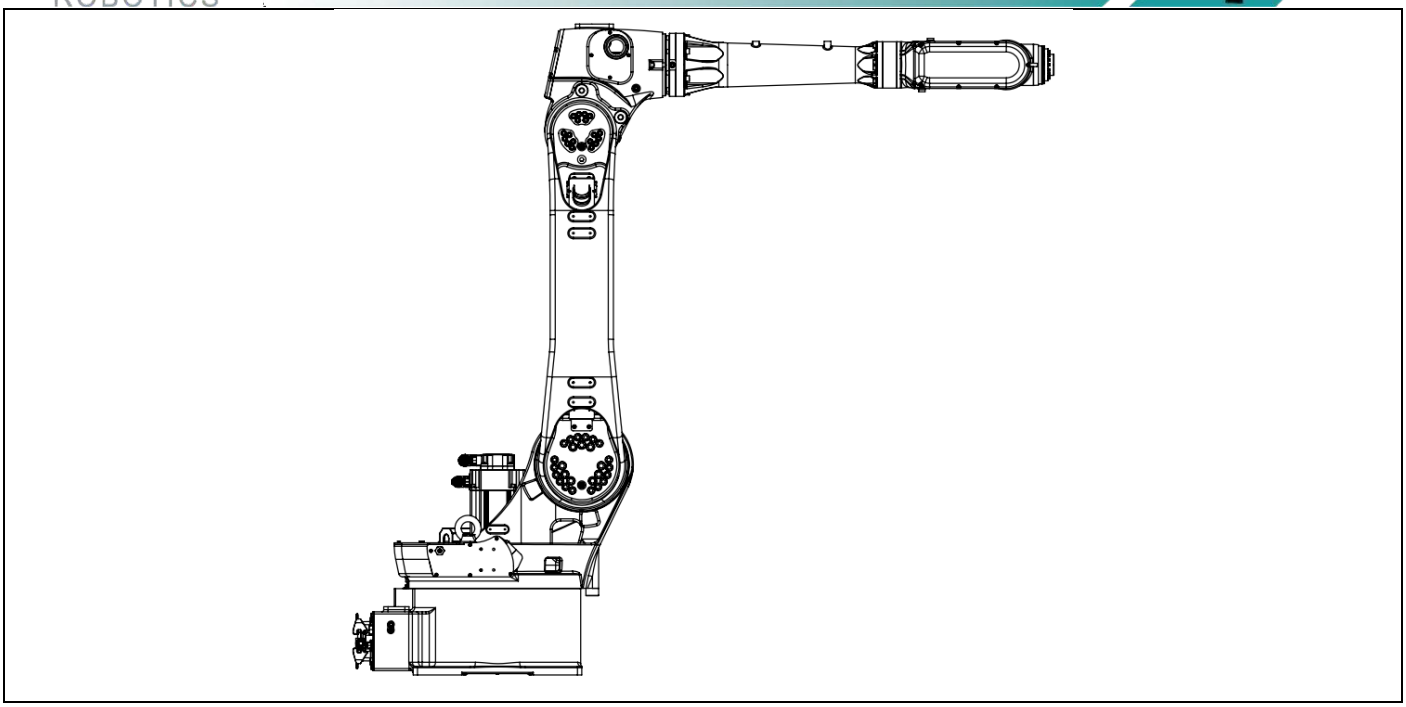

Fig 3.11 Zero point position （ER8-2000-CW）

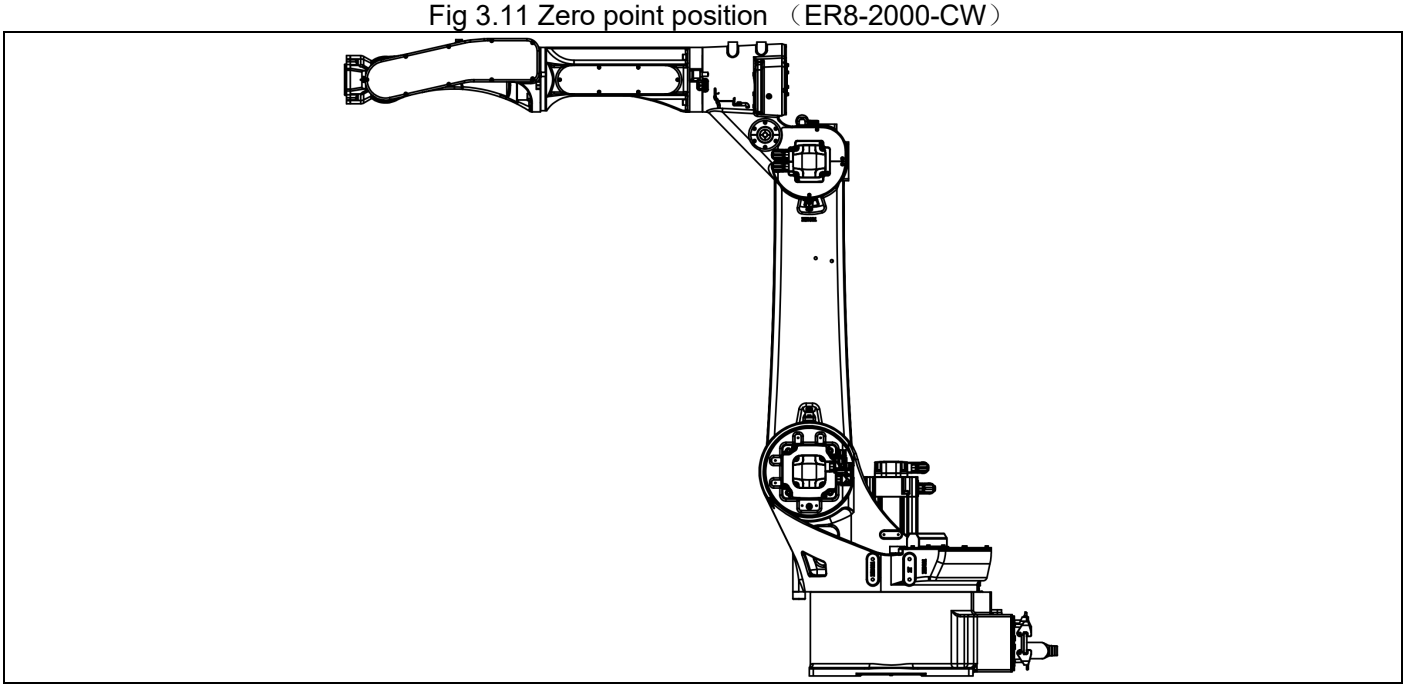

Fig 3.12 Zero point position （ER8-2000-HW、ER8-2000-HW-T）

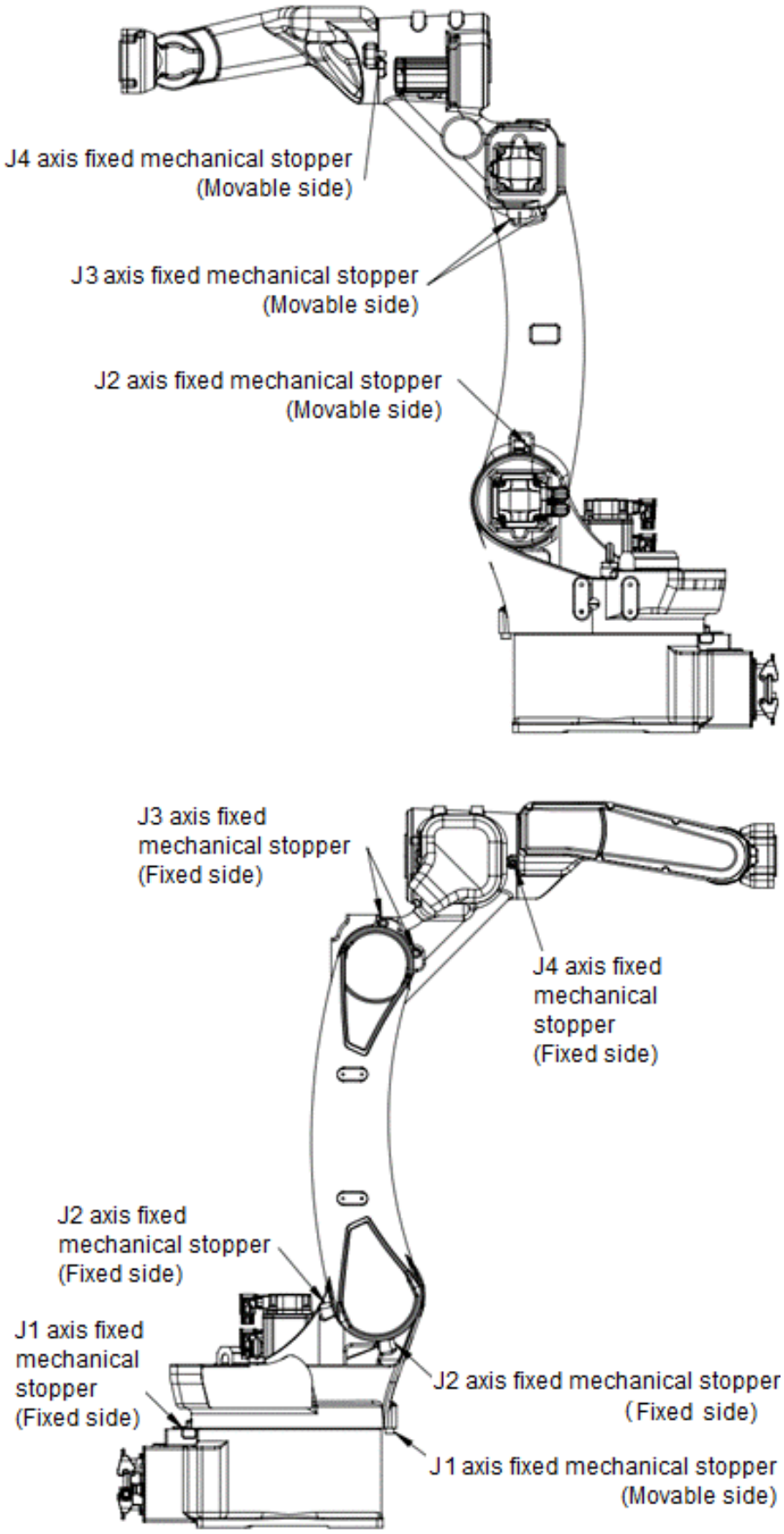

Fig 3.13 Mechanical stoppers(ER8-1450-HW)

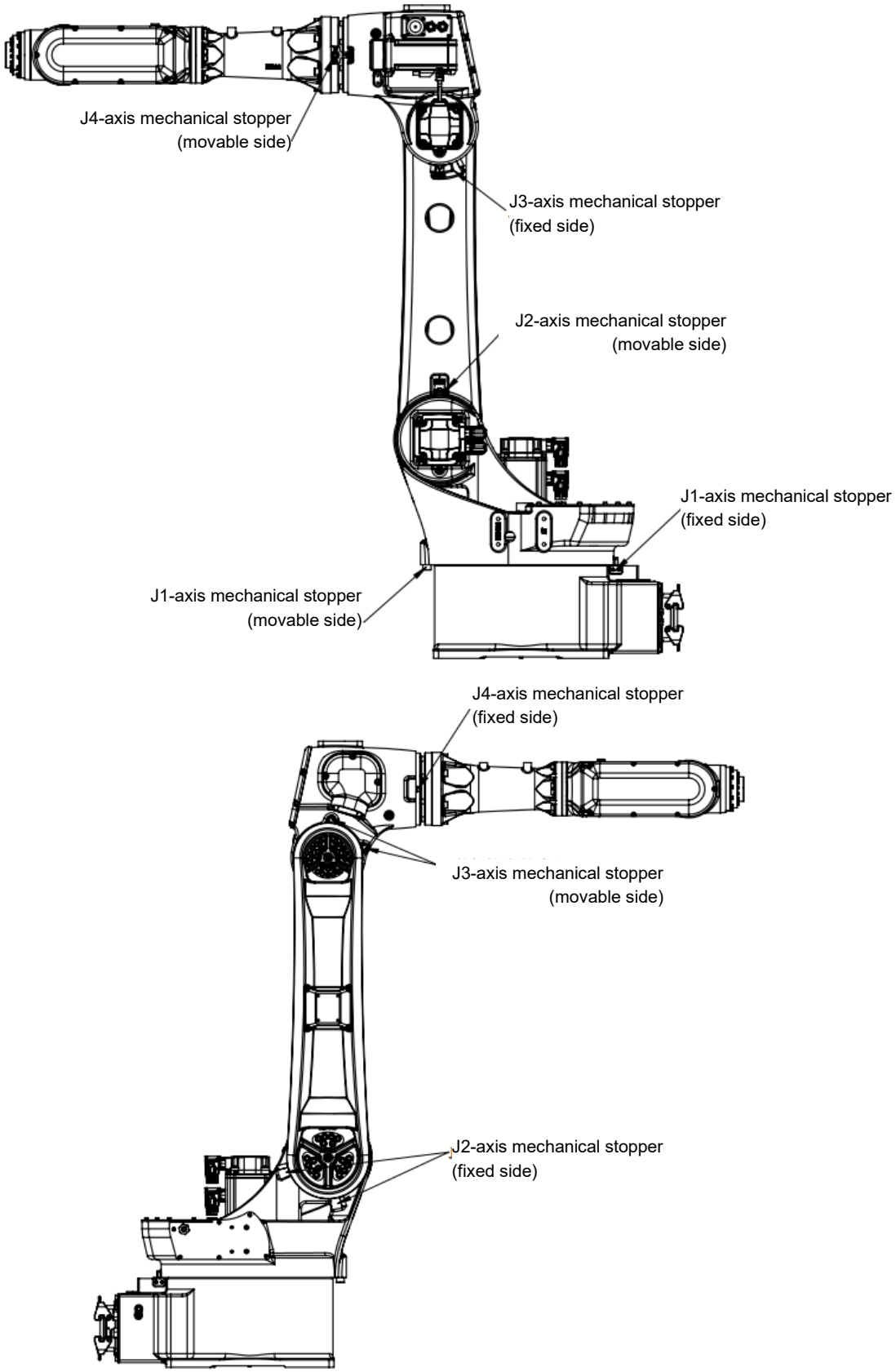

Fig 3.14 Mechanical stoppers(ER8-1500-CW)

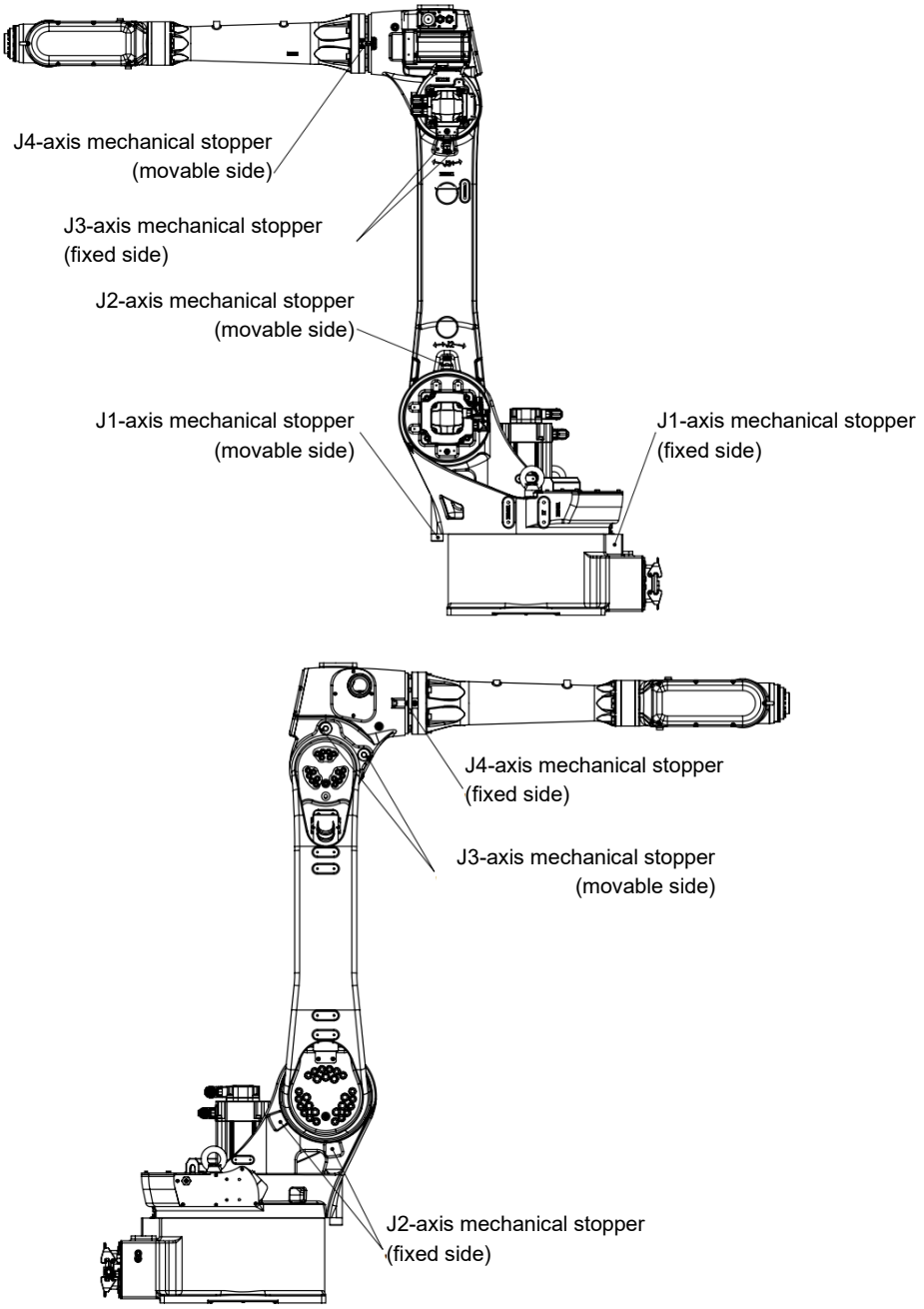

Fig 3.15 Mechanical stoppers(ER8-2000-CW)

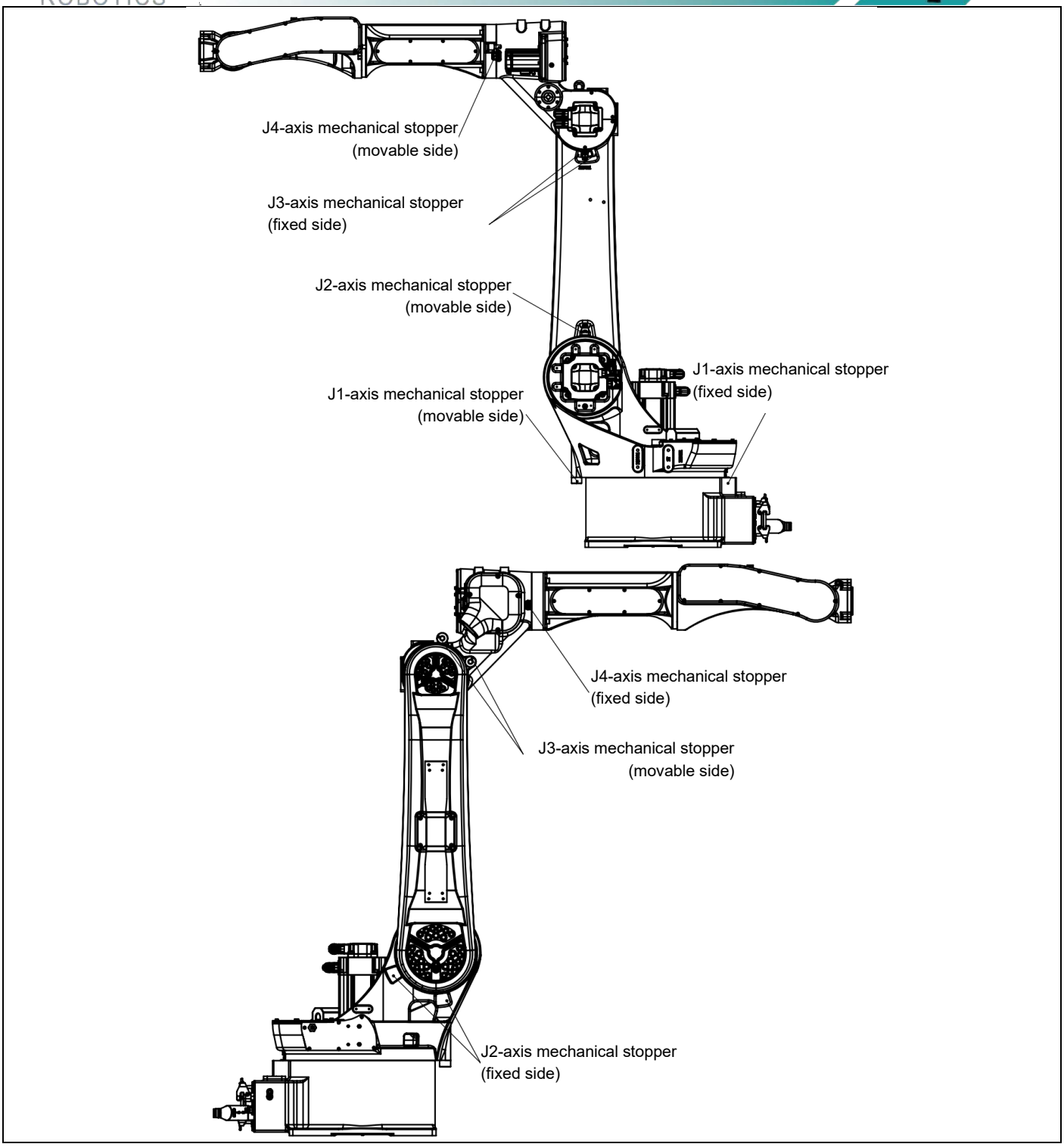

Fig 3.16 Mechanical stoppers(ER8-2000-HW、ER8-2000-HW-T)

Refer to system operation manual for more information about setting motion range.

3.4 WRIST LOAD CONDITION

Robot load capacity (including weight of gripper or welding gun) coincides with robot model. Observe restrict of load torque and load inertia strictly.

CAUTION	**Overload the robot may result in a worse movement performance on the robot or a reduction of service time on the reducer.** **Payloads include total weight of tools such as grippers, welding guns, tool convertors, dampers, etc. If payload exceeds allowable value, it is necessary to consult ESTUN representatives.**

Refer to *ESTUN robot bearing capacity calculation table* when calculate load torque and load inertia. Contact ESTUN sales representatives for more detail.

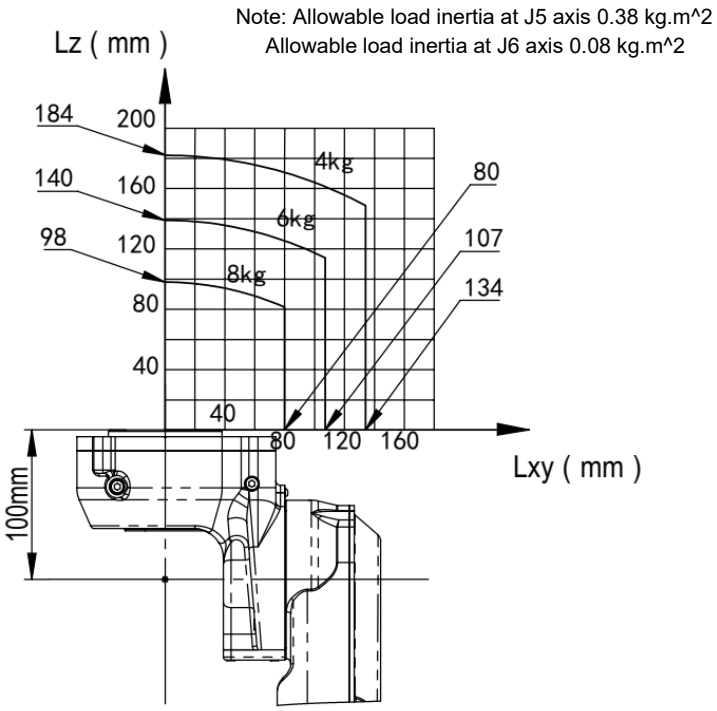

Fig 3.17 Load capacity at wrist（ER8-1450-HW）

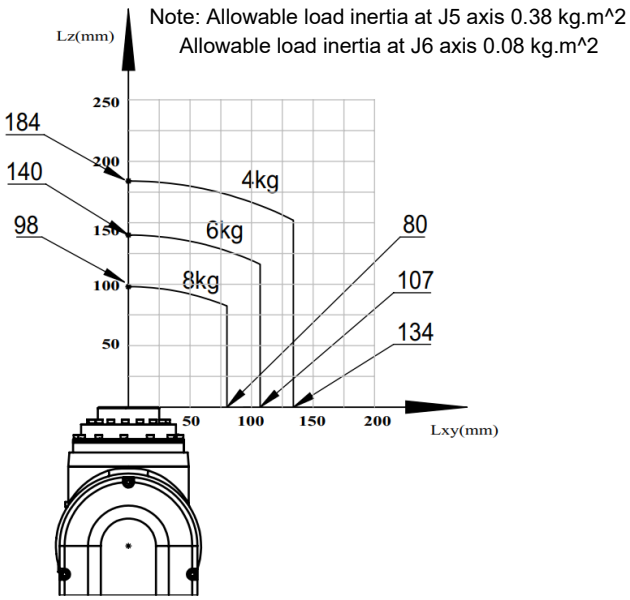

Fig 3.18 Load capacity at wrist（ER8-1500-CW）

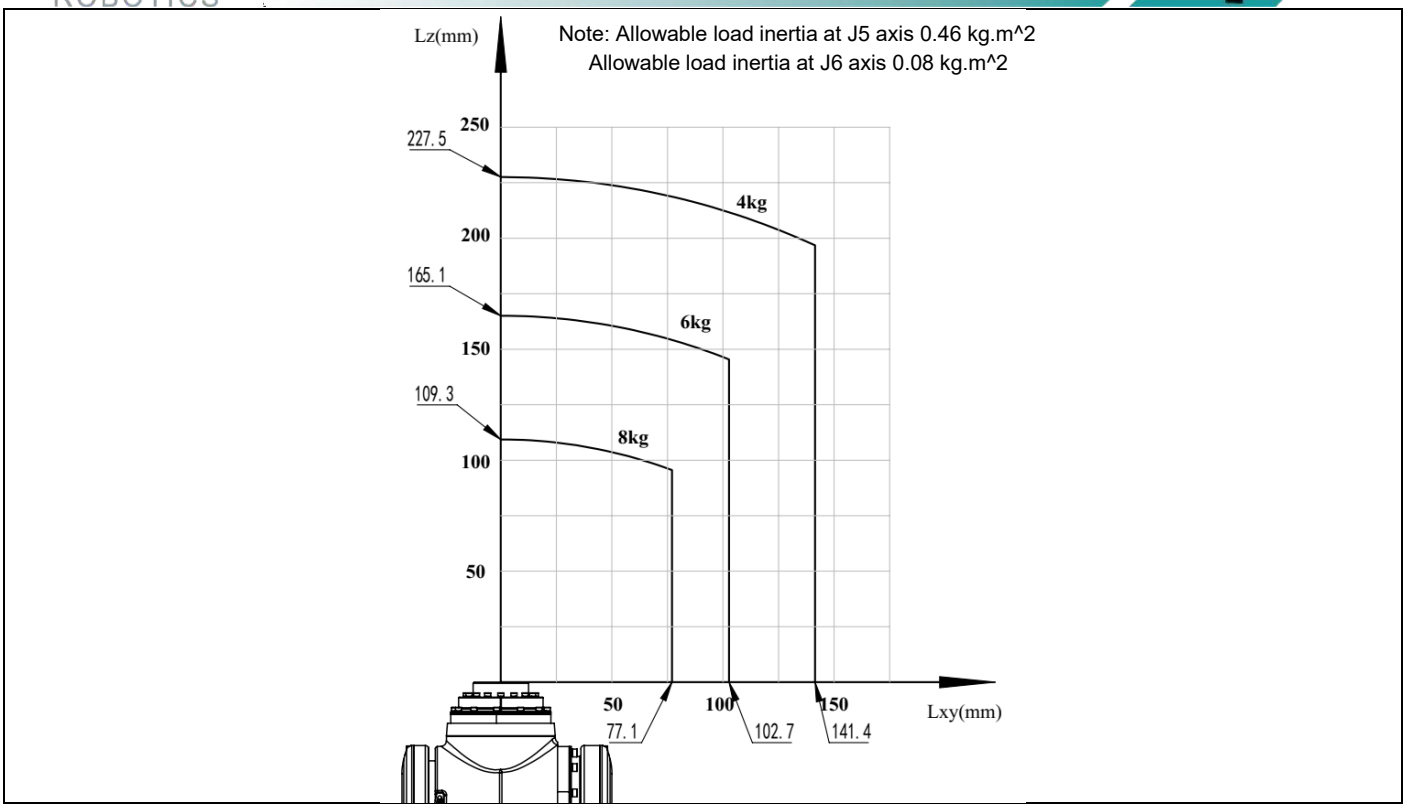

Fig 3.19 Load capacity at wrist（ER8-2000-CW）

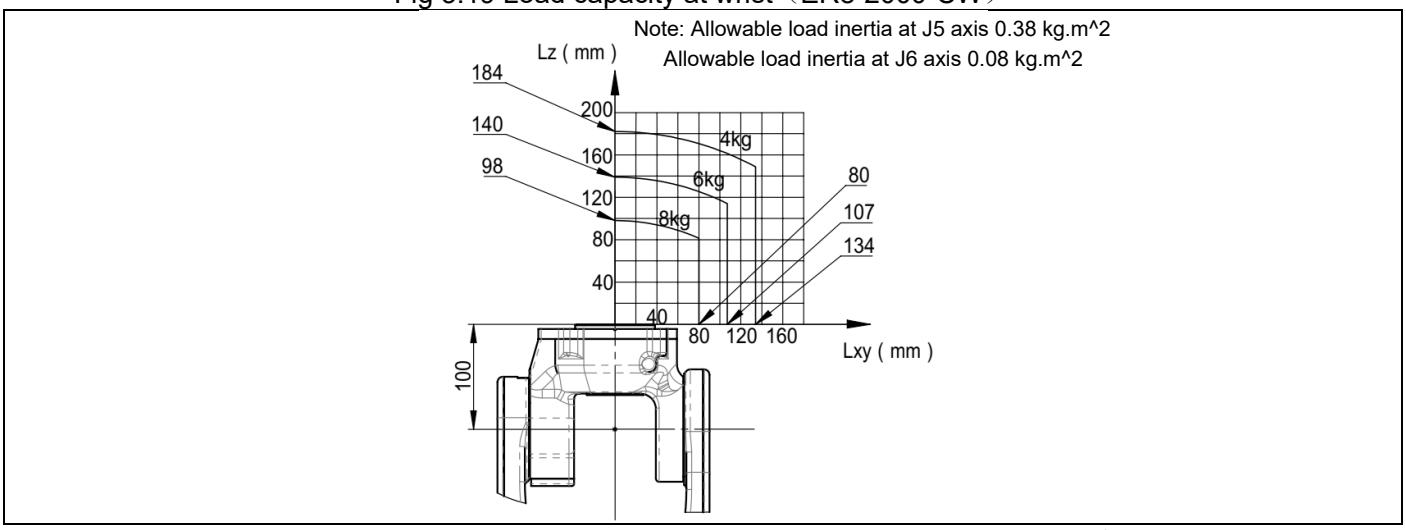

Fig 3.20 Load capacity at wrist（ER8-2000-HW、ER8-2000-HW-T）

3.5 ADDITIONAL LOAD CONDITION

ER8-1450-H robot may have additional loads. Additional load condition is shown as below.

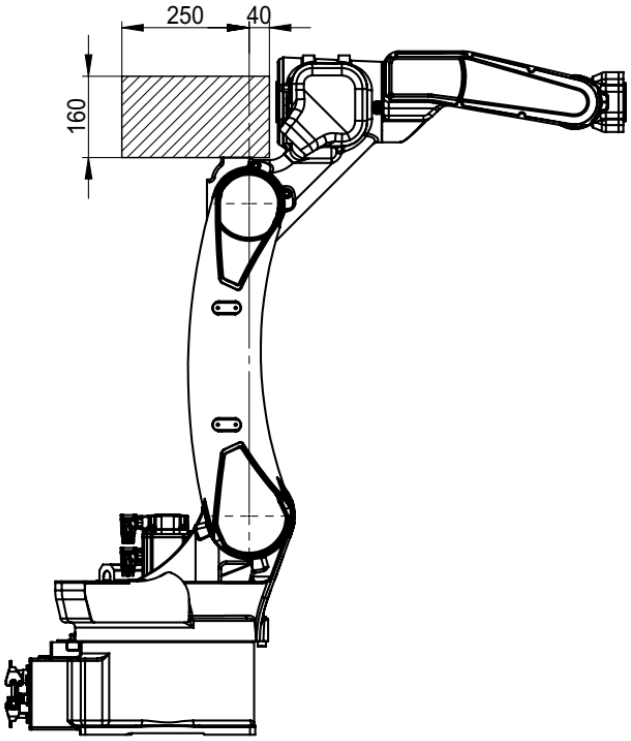

Notes：

1. The coordinate origin is on the midpoint of center line of additional load mounting holes. Unit: mm.
2. Centroid of additional load should be within the shadow as shown in the figure above, and be less than 10kg.

Fig 3.21 Additional load condition（ER8-1450-HW）

W: Loadable weight of the end flange mounting surface

W: Loadable weight on motor mount surface

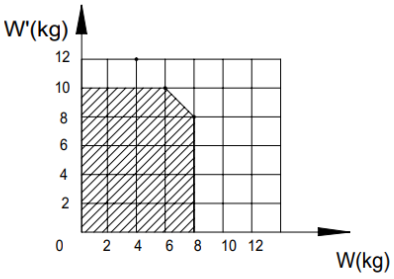

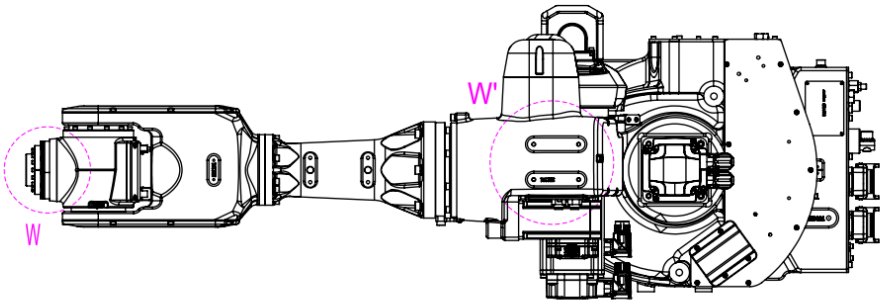

Notes：

1. The coordinate origin is on the midpoint of center line of additional load mounting holes. Unit: mm.
2. Centroid of additional load should be within the shadow as shown in the figure above, and be less than 10kg.

Fig 3.22 Additional load condition（ER8-1500-CW）

W: Loadable weight of the end flange mounting surface

W: Loadable weight on motor mount surface

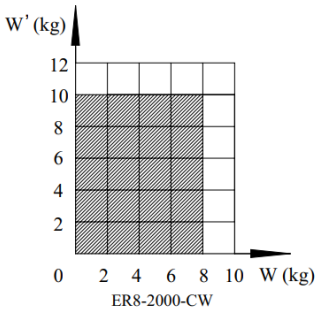

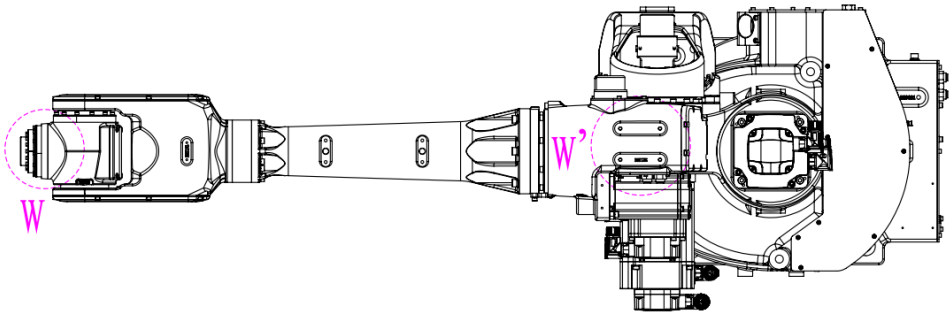

Notes：

1. The coordinate origin is on the midpoint of center line of additional load mounting holes. Unit: mm.
2. Centroid of additional load should be within the shadow as shown in the figure above, and be less than 10kg.

Fig 3.23 Additional load condition（ER8-2000-CW）

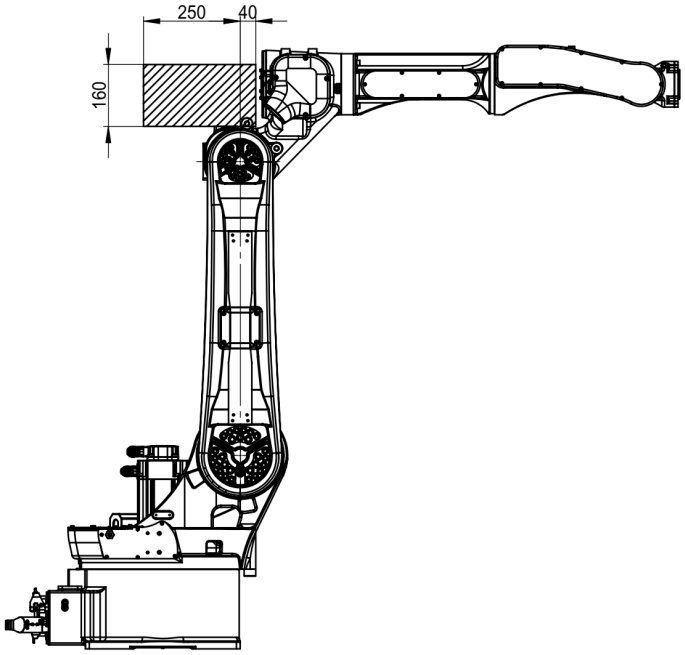

Notes：

1. The coordinate origin is on the midpoint of center line of additional load mounting holes. Unit: mm.
2. Centroid of additional load should be within the shadow as shown in the figure above, and be less than 10kg.

Fig 3.24 Additional load condition（ER8-2000-HW、ER8-2000-HW-T）

4.EQUIPMENT INSTALLATION TO THE ROBOT

4.1 FLANGE DIMENSION

This section describes the mounting face dimension of the end effector. Consider the depth of the screw holes and pin holes sufficiently before choose the length of the bolts and pins. Antirust measures of screws, grippers, etc., should be considered as well.

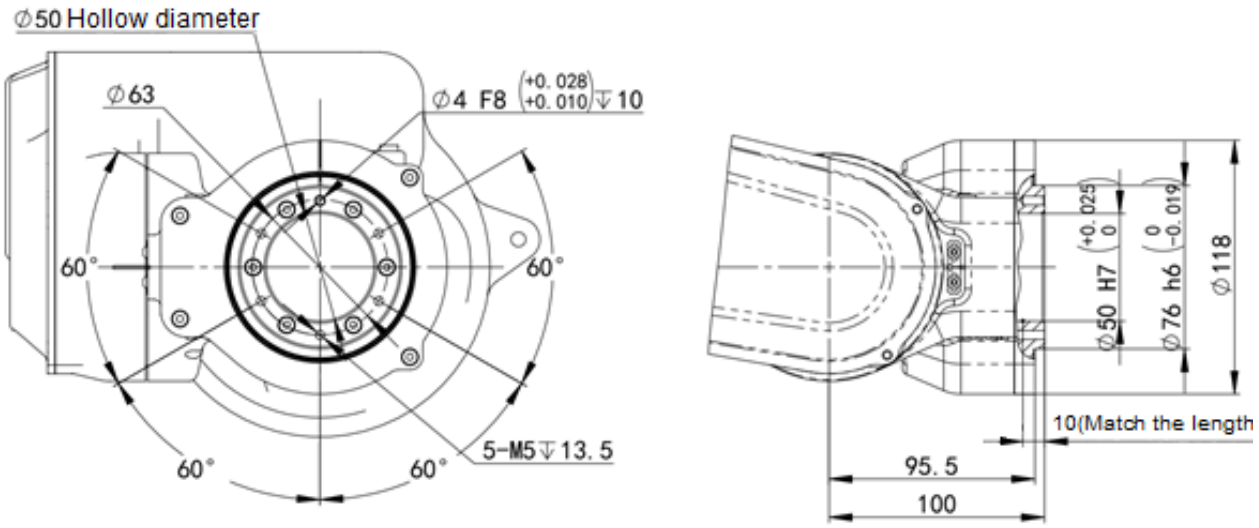

Item and model	QTY
Fixed screw：M5（GB/T 70.1 12.9 grade）	5
Spring washer：Φ5（GB/T 93）	5
Positioning pin：cylindrical pin Φ4（GB/T120.2）	1

Fig 4.1 End flange mounting dimension（ER8-1450-HW）

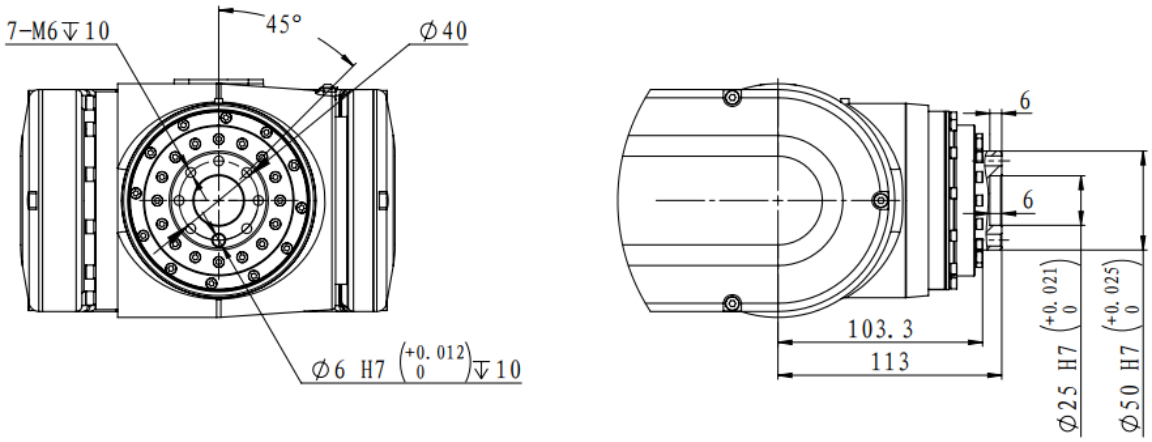

Item and model	QTY
Fixed screw：M5（GB/T 70.1 12.9 grade）	5
Spring washer：Φ5（GB/T 93）	5
Positioning pin：cylindrical pin Φ4（GB/T120.2）	1

Fig 4.2 End flange mounting dimension（ER8-1500-CW）

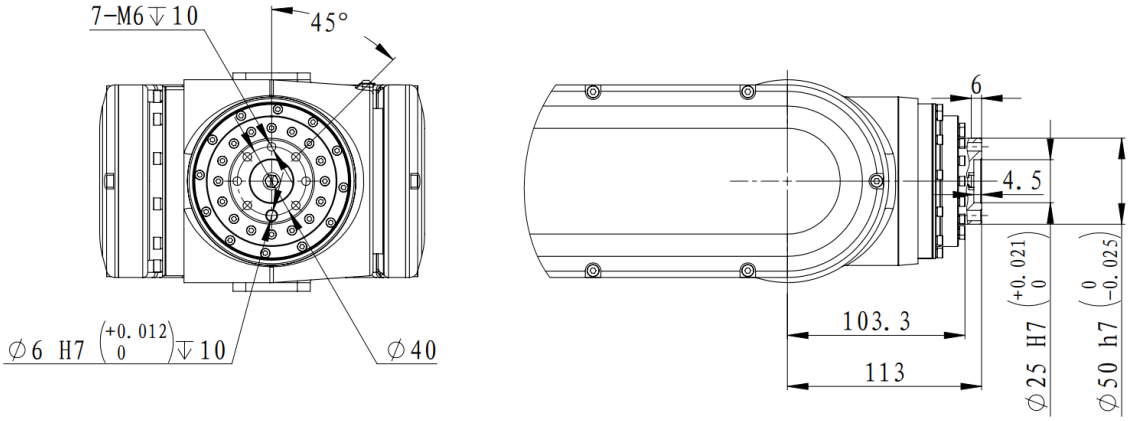

Item and model	QTY
Fixed screw：M5（GB/T 70.1 12.9 grade）	5
Spring washer：Φ5（GB/T 93）	5
Positioning pin：cylindrical pin Φ4（GB/T120.2）	1

Fig 4.3 End flange mounting dimension（ER8-2000-CW）

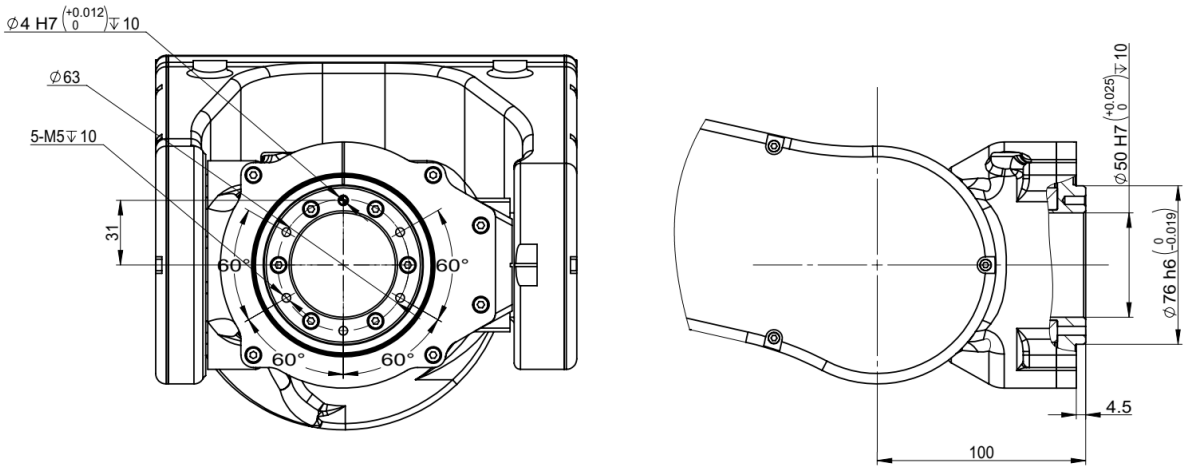

Item and model	QTY
Fixed screw：M5（GB/T 70.1 12.9 grade）	5
Spring washer：Φ5（GB/T 93）	5
Positioning pin：cylindrical pin Φ4（GB/T120.2）	1

Fig 4.4 End flange mounting dimension（ER8-2000-HW、ER8-2000-HW-T）

4.2 EUIPMENT MOUNTING FACE

As shown in the figures below, tapped holes are provided to install equipment to the robot.

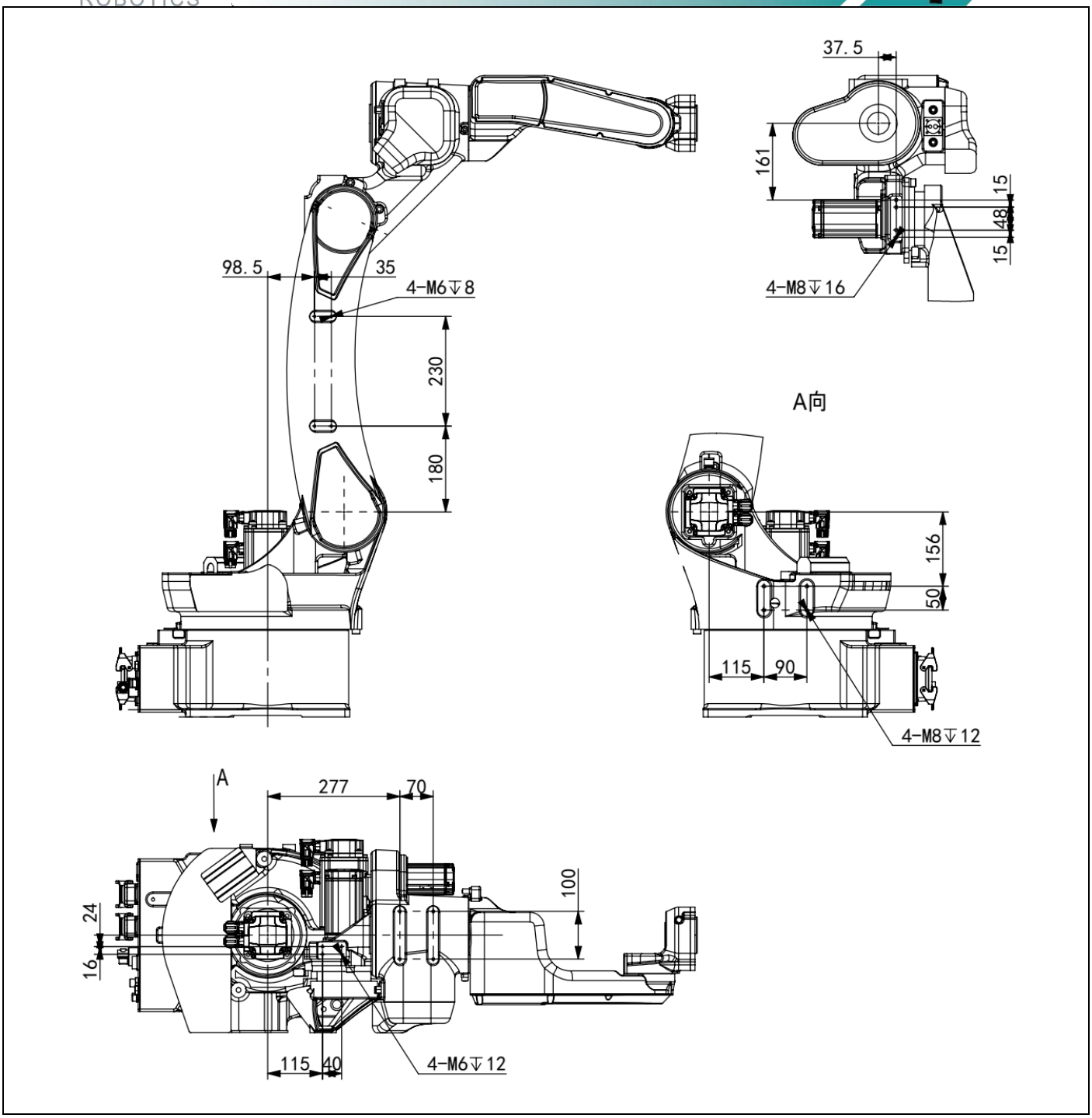

Fig 4.5 Equipment mounting face(ER8-1450-HW)

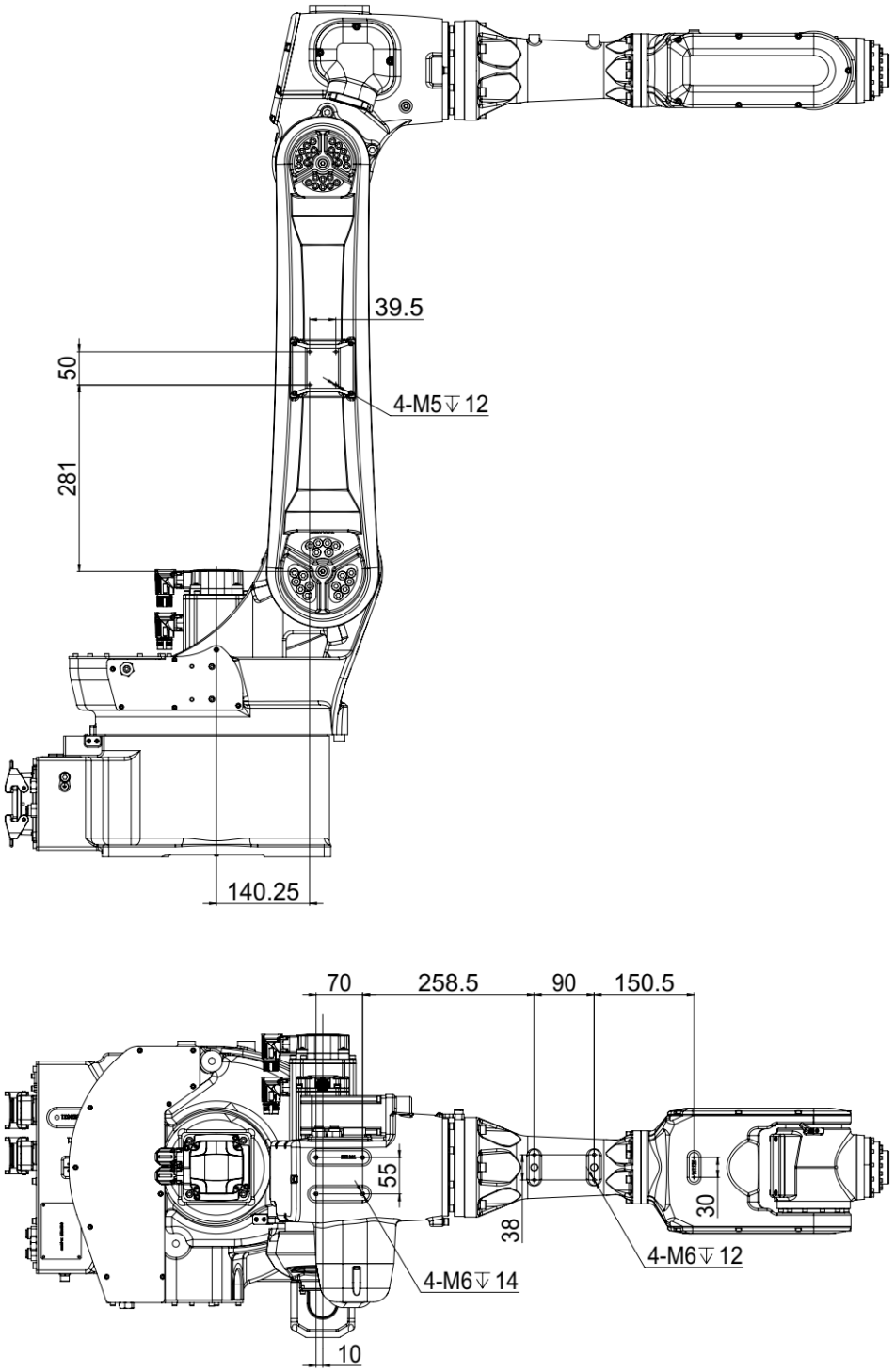

Fig 4.6 Equipment mounting face(ER8-1500-CW)

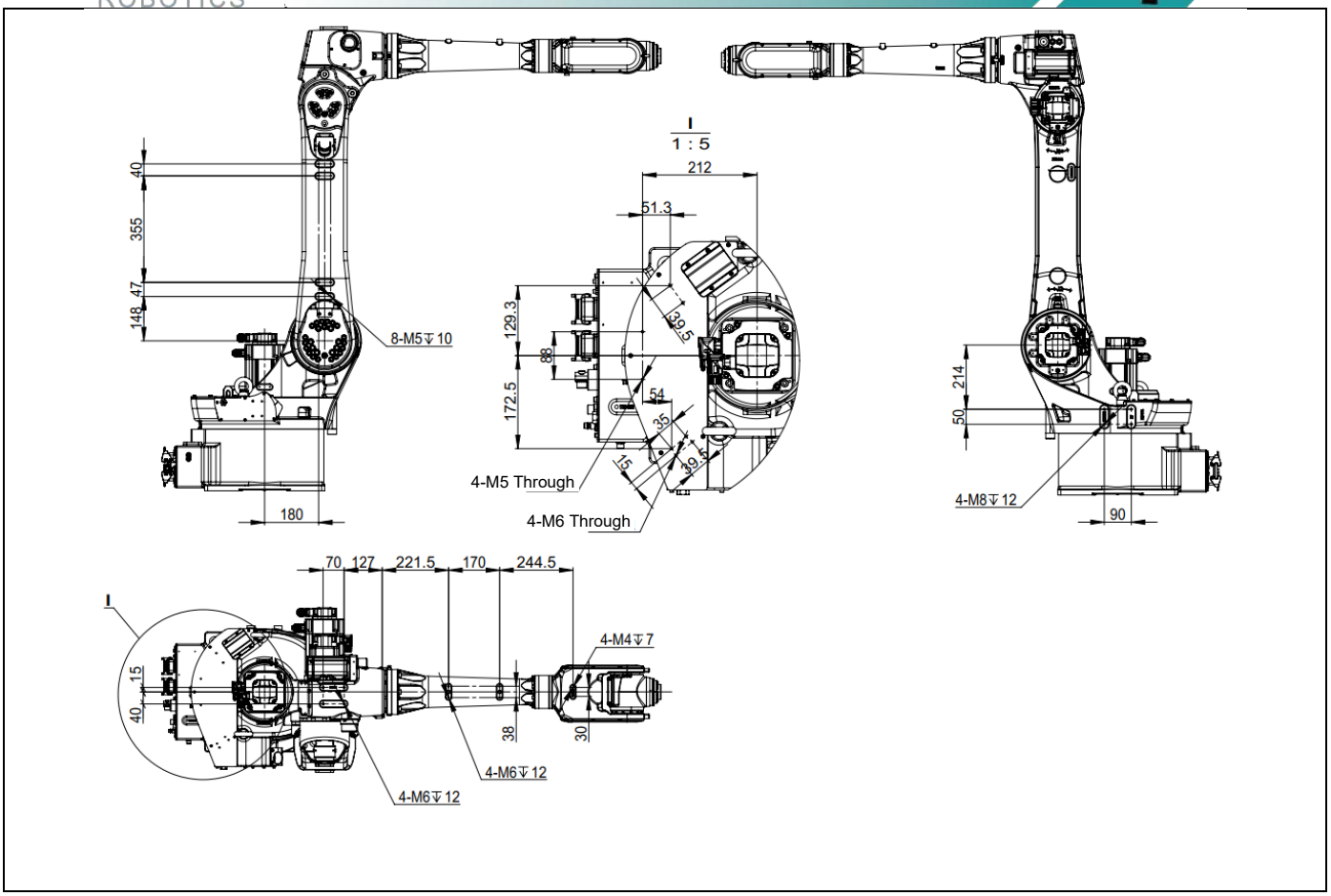

Fig 4.7 Equipment mounting face(ER8-2000-CW)

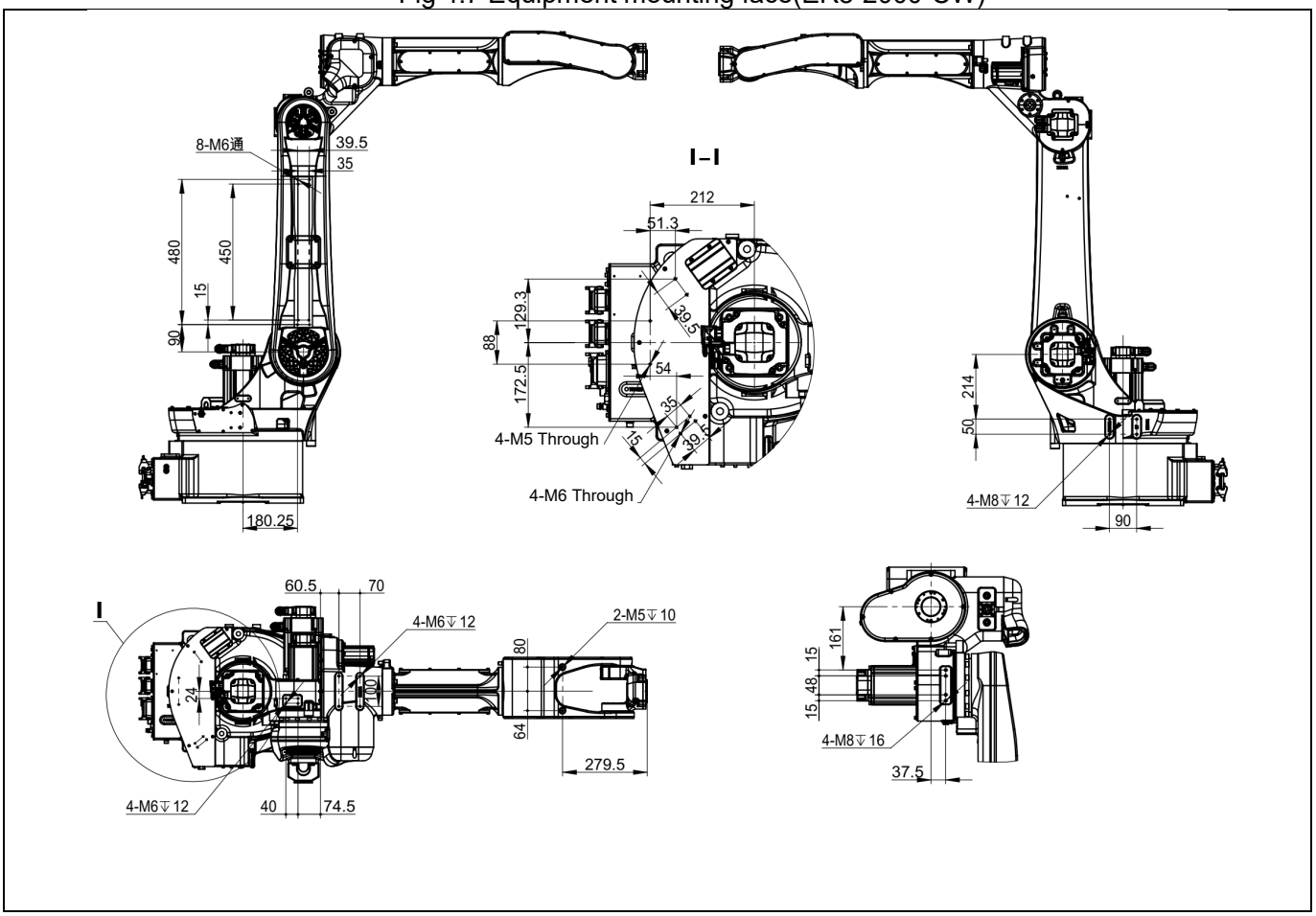

Fig 4.8 Equipment mounting face(ER8-2000-HW、ER8-2000-HW-T)

CAUTION

Take precautions to avoid interference between peripheral device and the robot.
Payload on J3-axis should not exceed 10kg.

4.3 PIPES AND TUBES

The robot has inlets and outlets openings to supply air or hydraulic pressure to the end effector.

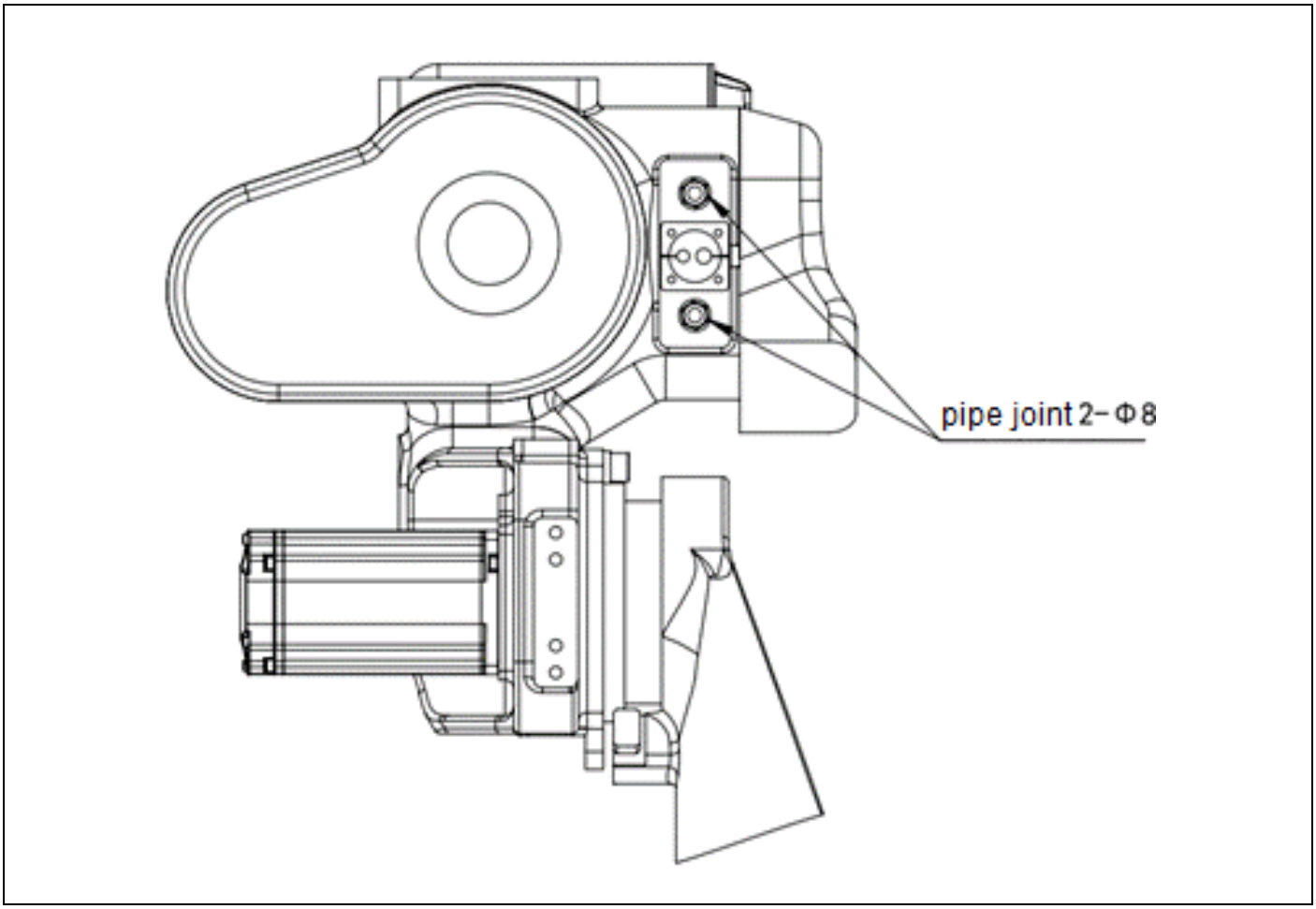

Fig 4.9 Pipes and tubes（ER8-1450-HW）

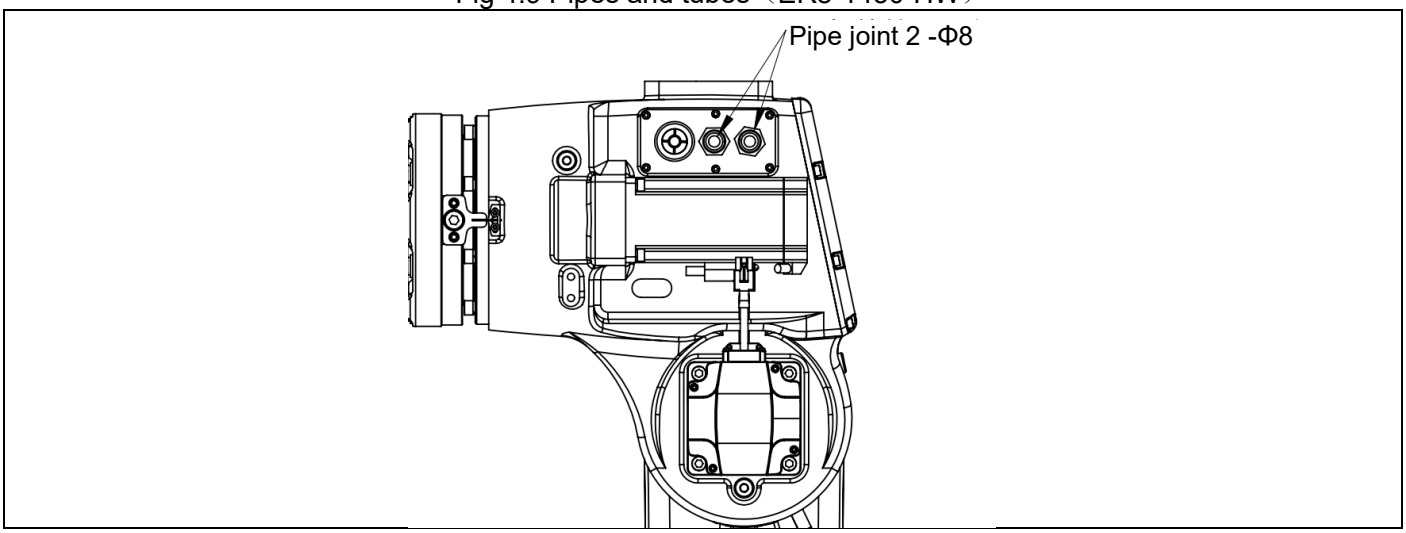

Fig 4.10 Pipes and tubes（ER8-1500-CW）

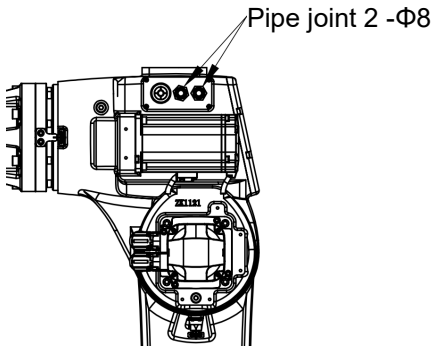

Fig 4.11 Pipes and tubes（ER8-2000-CW）

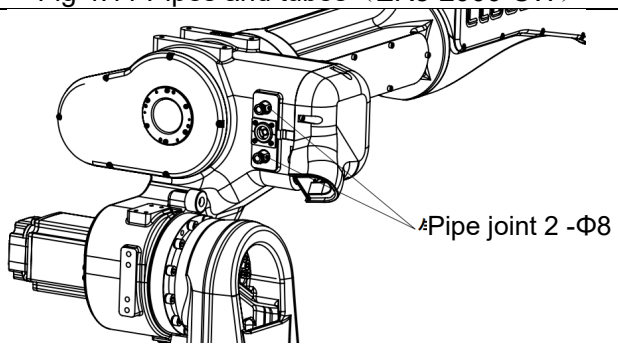

Fig 4.12 Pipes and tubes（ER8-2000-HW、ER8-2000-HW-T）

5. CHECK AND MAINTENANCE

Before performing any maintenance, be sure to read SAFETY PRECAUTIONS and understand the content.

CAUTION

Never implement any maintenance unless the power of the robot is cut off.

5.1 DAILY CHECKS

Check the items below before daily operation as occasion demands.

Item	Check item	Check points
1	Oil seepage	Check if there is oil on the sealed part. If there is an oil seepage, clean it.
2	Vibration, abnormal noises	Check whether vibration or abnormal noises occur in each transmission mechanism. If there is vibration or abnormal noises, perform measures referring to section 7.2.
3	Positioning accuracy	Check whether the taught positions of the robot have not deviated from the previous taught positions. Check whether the stop position have not deviated from the previous stop positions.
4	Cooling fan in the cabinet	Check whether poor ventilation or abnormal noise occur in the cooling fan on the backside.
5	Peripheral cable set part	Check if there is missing parts, fray or rust.
6	Peripheral electrical equipment	Check whether the connection of peripheral electrical equipment or the button is normal. Check if there is any fray on the surface.
7	Warnings	Check whether unexpected warnings occur in the alarm screen on the teach pendant. If unexpected warnings occur, perform measures as described in the ALARM DISPLAY in Cabinet Operator'.

5.2 PERIODIC CHECKS AND MAINTENANCE

Check the items at the intervals recommended below based on the total time or the accumulated operating time, whichever comes first. Periodic checks keep the performance of the robot. The items below can be performed by yourself, or you can contact ESTUN for maintenance service.

Check and maintenance intervals (Operating time, Accumulated operating time)						Check and maintenance item	Check points, management and maintenance method
1 month 320h	3 months 960h	1 year 3840h	1.5 years 5760h	3years 11520h	4years 15360h		
○ Only 1st check	○					Cleaning the controller ventilation system	Confirm the controller ventilation system is not dusty. If dust has accumulated, remove it.
	○					Check the external damage or peeling paint	Check whether the robot has external damage or peeling paint due to the interference with the peripheral equipment. If an interference occurs, eliminate the cause. Also, if the external damage is serious, and causes a problem in which the robot will not operate, replace the damaged parts.
	○					Check damages of the cable protection sheaths	Check whether the cable protection sheaths of the mechanical unit cable have holes or tears. If damage is found, replace the cable protection sheath. If the cable protection sheath is damaged due to the interference with peripheral equipment, eliminate the cause.
	○					Check for water	Check whether the robot is subjected to water or cutting oils. If water is found, remove the cause and wipe off the liquid.
	○ Only 1st check	○				Check for damages to the teach pendant cable, the operation box connection cable or the robot connection cable	Check whether the cable connected to the teach pendant, operation box and robot are unevenly twisted or damaged. If damage is found, replace the damaged cables.
	○ Only 1st check	○				Check for damage to the mechanical unit cable (movable part)	Observe the movable part of the mechanical unit cable, and check for damage. Also, check whether the cables are excessively bent or unevenly twisted.
	○ Only 1st check	○				Check for damage to the end effector (hand) connection cable	Check whether the end effector connection cables are unevenly twisted or damaged. If damage is found, replace the damaged cables.
	○ Only 1st check	○				Check the connection of each axis motor and other exposed connectors	Check the connection of each axis motor and other exposed connectors.
	○ Only 1st check	○				Retightening the end effector mounting bolts	Retightening the end effector mounting bolts.
	○ Only 1st check	○				Retightening the external main bolts	Retighten the robot installation bolts, bolts to be removed for inspection, and bolts exposed to the outside. Refer to the recommended bolt tightening torque guidelines at the end of the manual. An adhesive to prevent bolts from loosening is applied to some bolts. If the bolts are tightened with greater than the recommended torque, the adhesive might be removed. Therefore, follow the recommended bolt tightening torque guidelines when retightening the bolts.

	○ Only 1st check	○				Check the mechanical stopper	Check that there is no evidence of a collision on the mechanical stopper, and check the looseness of the stopper mounting bolts.
	○ Only 1st check	○				Clean spatters, sawdust and dust	Check that spatters, sawdust, or dust does not exist on the robot main body. If dust has accumulated, remove it. Especially, clean the robot movable parts well (each joint, the balancer rod, the support part of in front and behind of the balancer, and the cable protection sheaths).
	○ Only 1st check	○				Check the operation of the cooling fan	(When cooling fans are installed on the each axis motor) Check whether the cooling fans are operating correctly. If the cooling fans do not operate, replace them.
		○				Replacing the mechanical unit battery	Replace the controller battery.
				○		Replacing the grease of each axis reducer	Replace the grease of each axis reducer.
					○	Replacing the mechanical unit cable	Replace the mechanical unit cable. Contact ESTUN representative for information regarding replacing the cable.

5.3 ADJUST THE BELT

J4-axis, J5-axis and J6-axis of the robot are drove by timing belt. The belt tense tends to reduce after a period of operation. This section describes how to strain the belt

WARNING	**A loose timing belt may cause a reduction of robot repeatability and a shortness of belt lifetime. Use a proper force when straining the timing belt. Excessive tense may shorten the belt lifetime.**

Procedures of straining J4-axis timing belt are shown below.

1. Disassemble the hexagon flat round head screw M4X12 under the cover of the small arm. Remove the cover and keep it in a proper place.
2. Unscrew the hexagon screw M5X30 on the mounting plate of J4-axis.
3. Adjust the device at left side of the mounting plate (mainly adjust the M5 nut), make the screw firmly against to J4-axis motor mounting plate.
4. Test the tense on the side of the timing belt. Proper tense value is list in the table below.
5. Tighten the hexagon screw M5X16 on the mounting plate to remount the plate.
6. Use hexagon flat round head screw to fix the cover of the small arm. Tighten the screw.

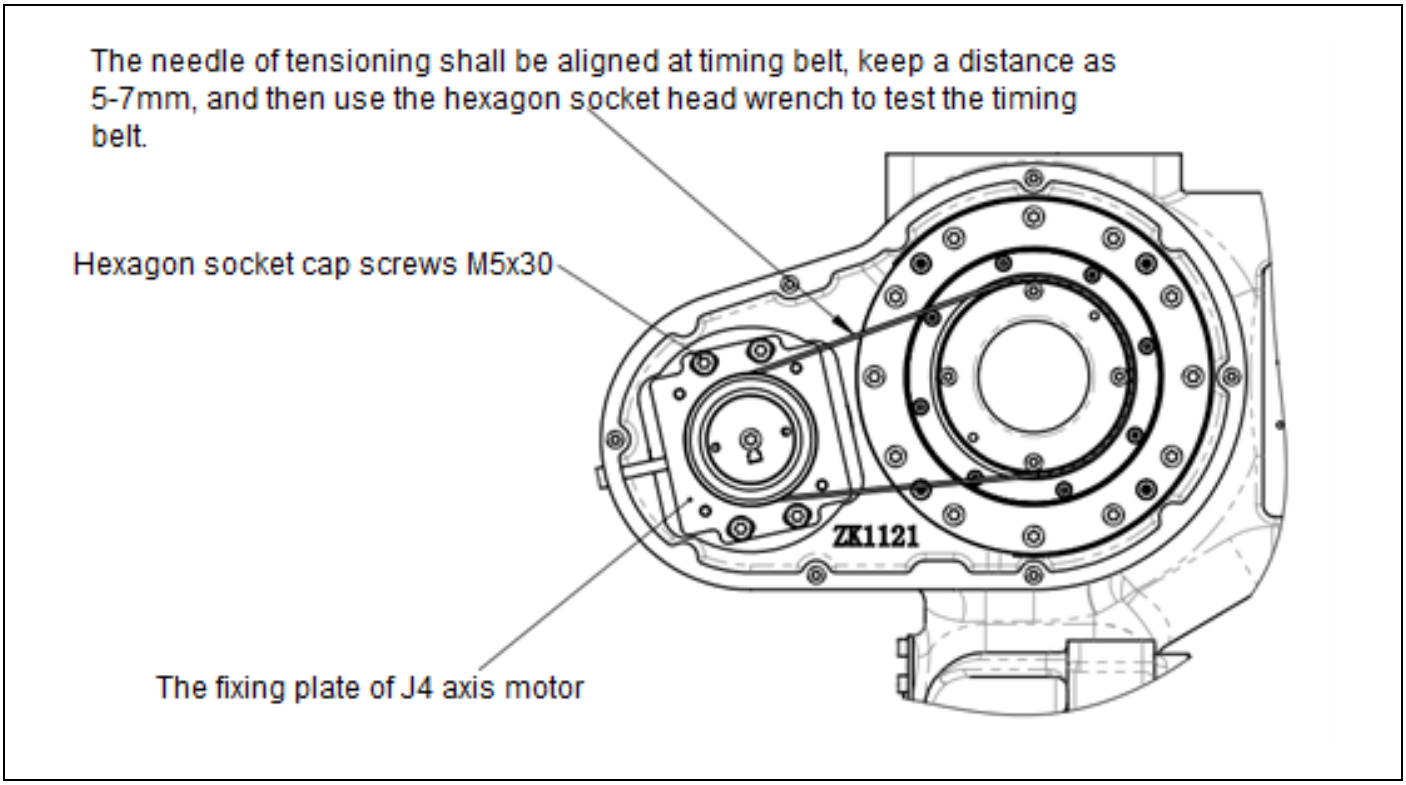

Fig 5.1 Strain the J4-axis timing belt

Procedures of straining J5-axis and J6-axis timing belt are shown below.

1. Disassemble the hexagon flat round head screw M4X10 in the side cover of the small arm. Remove the cover and keep it in a proper place.
2. Unscrew the hexagon screw M4X12 on the mounting plate of J5-axis and J6-axis.
3. Adjust the position of mounting plate to strain the timing belt.
4. Test the tense on the side of the timing belt. Proper tense value is list in the table below.
5. Tighten the hexagon screw M4X12 on the mounting plate to remount the plate.
6. Use hexagon flat round head screw to fix the side cover of the small arm. Tighten the screw.

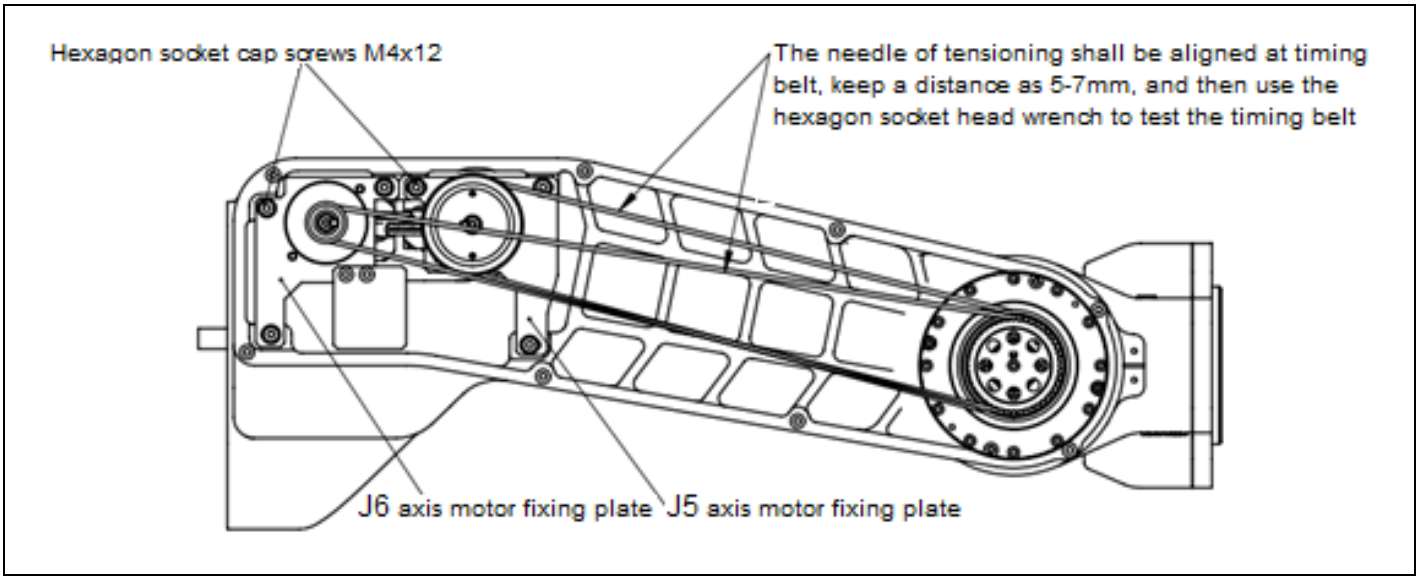

Fig 5.2 Strain the J5-axis and J6-axis timing belt（ER8-1450-HW）

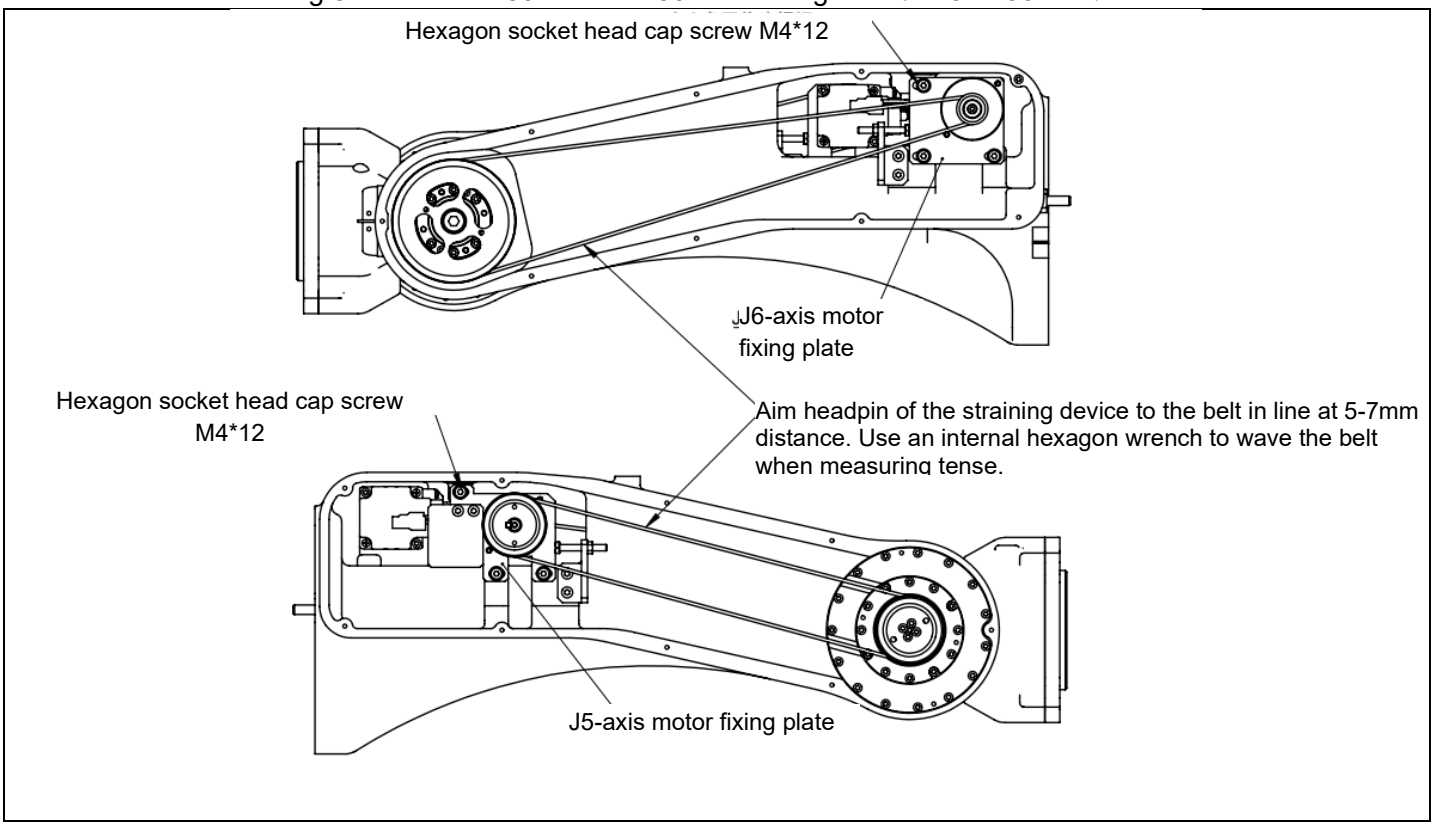

Fig 5.3 Strain the J5-axis and J6-axis timing belt（ER8-2000-HW、ER8-2000-HW-T）

ER8-2000-CW robot J5 axis tensioning timing belt steps:
1. Disassemble the hexagonal flat round head screw M4X12 inside the right cover plate of the forearm, remove the right cover plate of the forearm and place it in the storage area;
2. Loosen the Allen screw M5X16 on the fixed plate of the J5 shaft motor;
3. Adjust the adjustment device under the fixed plate, mainly adjust the M4 nut, so that the screw is pressed against the J5 axis motor fixed plate;
4. Test the timing belt tension on the side of the timing belt to make the timing belt tension appropriate (see the table below for the specific range);
5. Tighten the Allen screw M5X16 that fixes the motor fixing plate to fix the motor fixing plate;
6. Install the right cover plate of the forearm to the wrist body through the hexagon flat round head screw, and tighten the screw symmetrically.

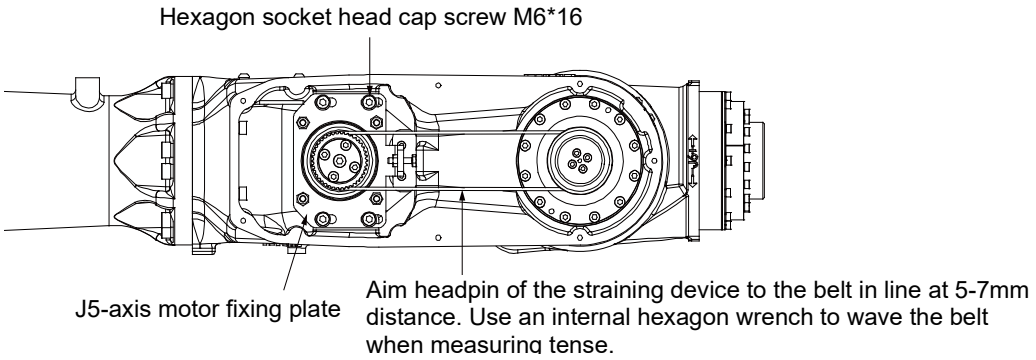

Fig 5.4 Strain the J5-axis and J6-axis timing belt（ER8-2000-HW、ER8-2000-HW-T）

Tab 5.1 Timing belt tense/frequency value reference(ER8-1450-HW、ER8-2000-HW、ER8-2000-HW-T)

Model		Range of belt tense	Range of frequency
J4 Timing belt	new belt	37.8-41.6N	134-140Hz
	used belt	26.5-30.2N	112-119Hz
J5 Timing belt	new belt	9.6-10.6N	80-90Hz
	used belt	6.72-7.68N	73-83Hz
J6 Timing belt	new belt	24.1-26.5N	60-70Hz
	used belt	16.8-19.2N	53-63Hz

Tab 5.1 Timing belt tense/frequency value reference(ER8-2000-CW)

Model		Range of belt tense	Range of frequency
Timing belt	new belt	44.2～48.6N	129～136Hz
	used belt	31.0～35.4N	108～116Hz

Measure the belt tense according to frequency, as internal parameter set is not required.

5.4 REPLACING THE BATTERIES

The position data of each axis is preserved by the backup batteries. The batteries need to be replaced every 1 year. Also use the following procedure to replace when the backup battery voltage drop alarm occurs.

Procedure of replacing the battery is shown below.

1. Press the emergency stop button to stop the robot motion.
2. Remove the plug cover on the robot base.
3. Take out the old batteries from the battery case fixed on the base.
4. Insert new batteries into the battery case while observing the correct direction.
5. Re-mount the plug cover after replacing the battery.

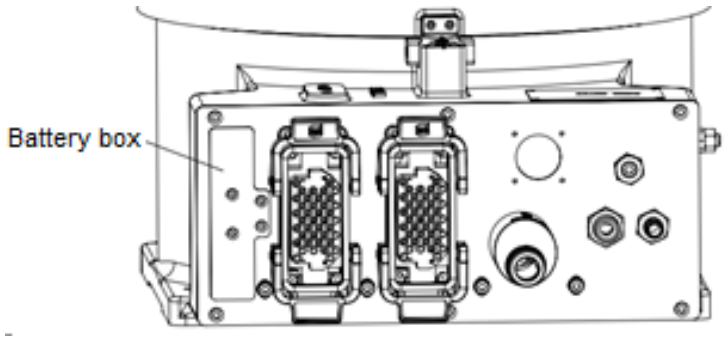

Fig 5.5 Battery replacement

CAUTION

Be sure to keep the power on. Replacing the batteries with the power turned off causes all current position data to be lost. Therefore, calibrating will be required again.

5.5 ROBOT GREASING

Greasing is required every 3 years, or for a cumulative operation time of 11520 hours, whichever occurs first, according to the following steps. Refer to the table below for the brand and quantities of the grease applied to each joint.

CAUTION

Reduce greasing period when the robot is subject to extreme conditions.

Tab 5.2 Replacing the grease every three years

Model	Position	QTY
ER8-1450-HW	J1-axis reducer	330g
	J2-axis reducer	305g
	J3-axis reducer	230g
ER8-1500-CW	J1-axis reducer	330g
	J2-axis reducer	310g
	J3-axis reducer	230g
	J4-axis齿轮箱	245g
ER8-2000-CW	J1-axis reducer	1050g
	J2-axis reducer	1410g
	J3-axis reducer	340g
	J4-axis齿轮箱	280g
ER8-2000-HW	J1-axis reducer	1050g
	J2-axis reducer	1410g
	J3-axis reducer	340g
ER8-2000-HW-T	J1-axis reducer	900g
	J2-axis reducer	1460g
	J3-axis reducer	370g

Recommend greasing gesture is list below.

Tab 5.3 the axis angle of robot lubrication（ER8-1450-HW、ER8-2000-HW、ER8-2000-HW-T）

<table>
<tr><th rowspan="2">Position</th><th colspan="6">Gesture</th></tr>
<tr><th>J1</th><th>J2</th><th>J3</th><th>J4</th><th>J5</th><th>J6</th></tr>
<tr><td>J1-axis reducer</td><td rowspan="3">Any</td><td rowspan="3">0°</td><td rowspan="2">Any</td><td rowspan="3">Any</td><td rowspan="3">Any</td><td rowspan="3">Any</td></tr>
<tr><td>J2-axis reducer</td></tr>
<tr><td>J3-axis reducer</td><td>0°</td></tr>
</table>

Tab 5.4 the axis angle of robot lubrication（ER8-1500-CW、ER8-2000-CW）

<table>
<tr><th rowspan="2">Position</th><th colspan="6">Gesture</th></tr>
<tr><th>J1</th><th>J2</th><th>J1</th><th>J4</th><th>J1</th><th>J6</th></tr>
<tr><td>J1-axis reducer</td><td rowspan="4">Any</td><td rowspan="4">0°</td><td rowspan="2">Any</td><td rowspan="3">Any</td><td rowspan="4">Any</td><td rowspan="4">Any</td></tr>
<tr><td>J2-axis reducer</td></tr>
<tr><td>J3-axis reducer</td><td rowspan="2">0°</td></tr>
<tr><td>J4-axis reducer</td><td>0°</td></tr>
</table>

5.5.1. POSITION OF OIL INLET/OUTLET ON EACH AXIS

CAUTION

Be sure to read SAFETY PRECAUTIONS and understand its contents before greasing.

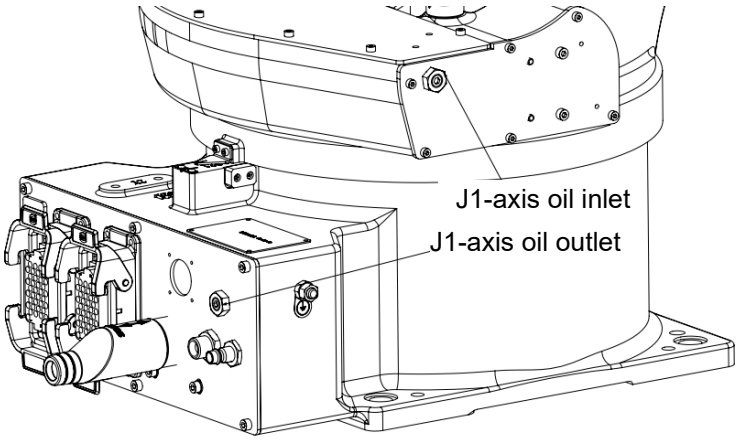

Fig 5.6 J1 axis oil inlet and outlet

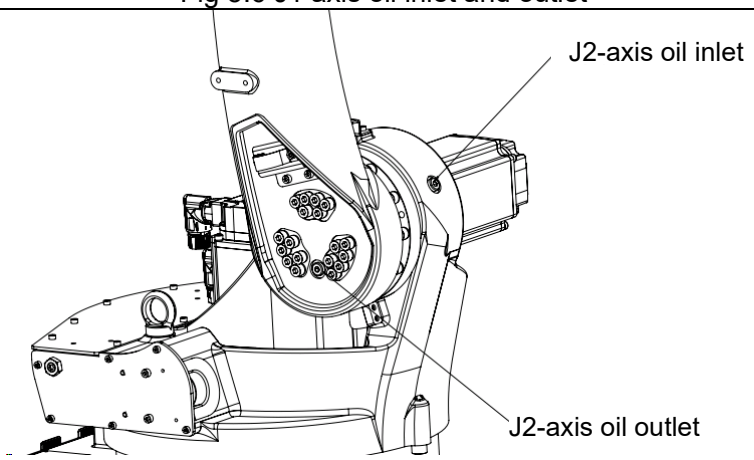

Fig 5.7 J2 axis oil inlet and outlet(ER8-1450-HW)

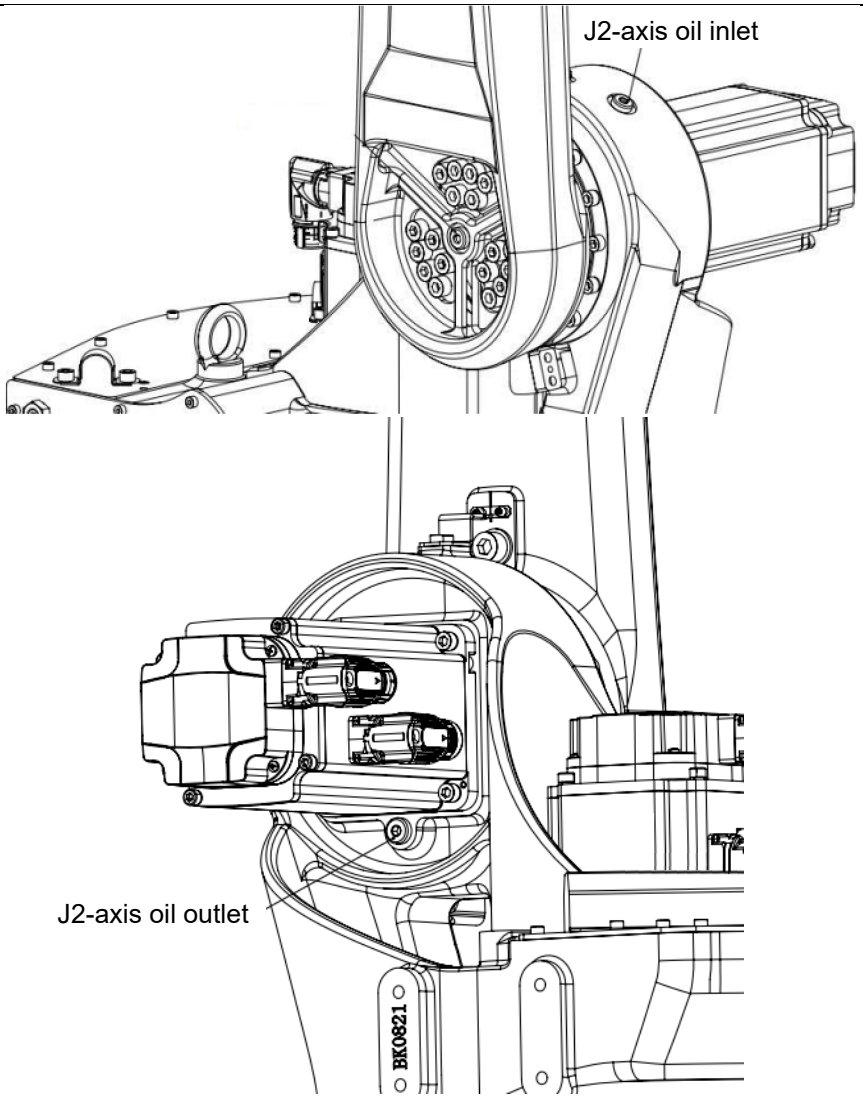

Fig 5.8 J2 axis oil inlet and outlet(ER8-1500-CW)

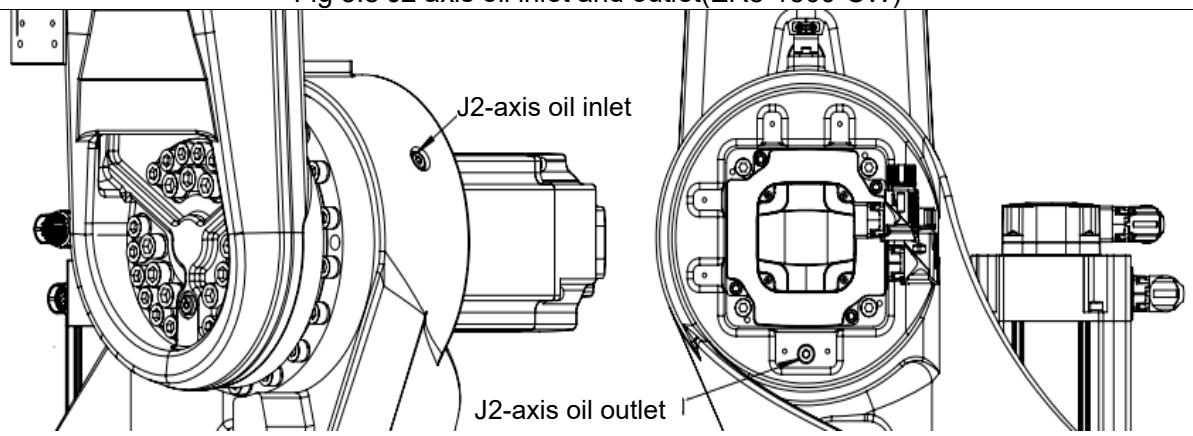

Fig 5.9 J2 axis oil inlet and outlet(ER8-2000-HW、ER8-2000-HW-T)

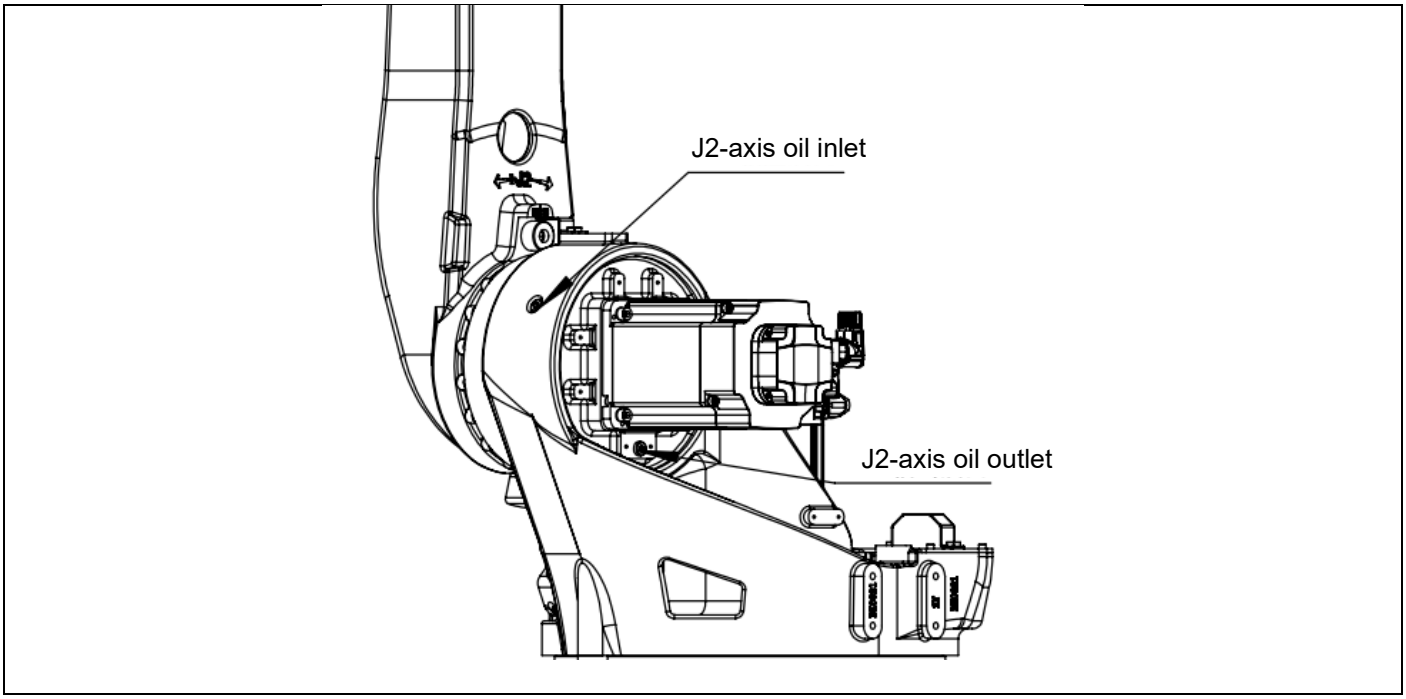

Fig 5.10 J2 axis oil inlet and outlet(ER8-2000-CW)

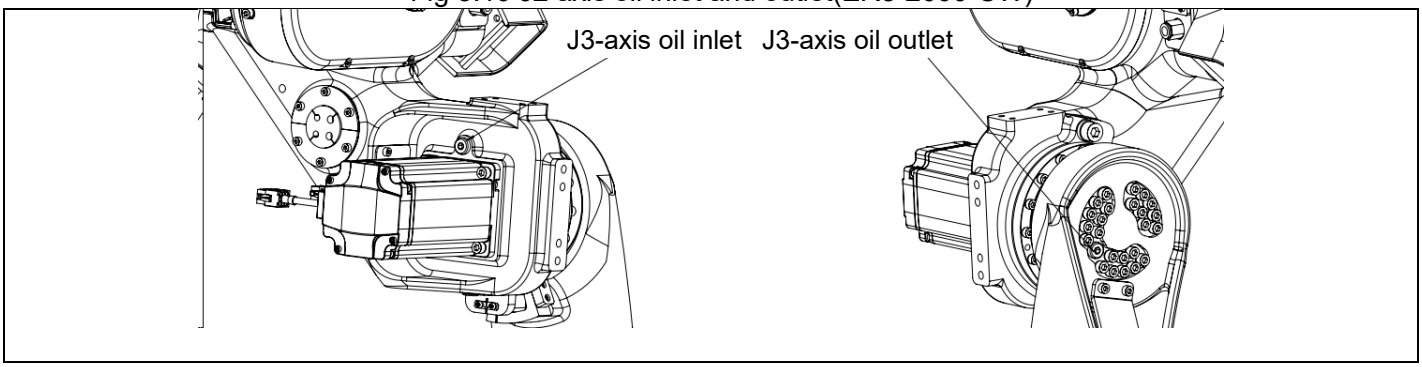

Fig 5.11 J3 axis oil inlet and outlet(ER8-1450-HW)

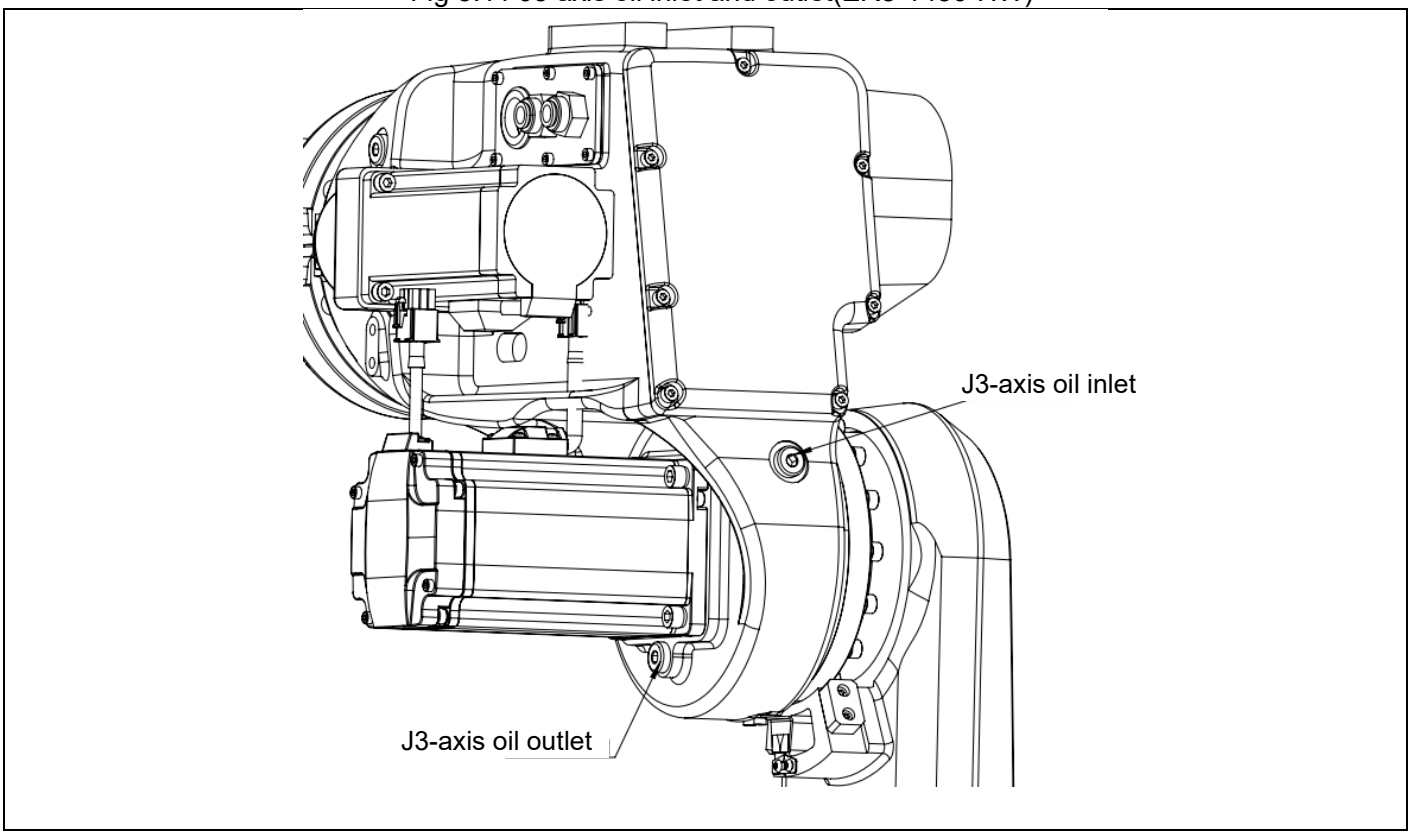

Fig 5.12 J3 axis oil inlet and outlet(ER8-1500-CW)

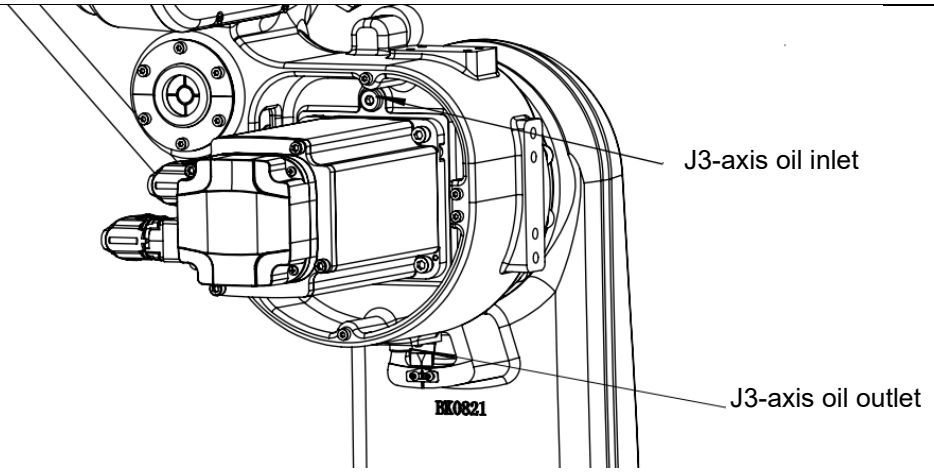

Fig 5.13 J3 axis oil inlet and outlet(ER8-2000-HW、ER8-2000-HW-T)

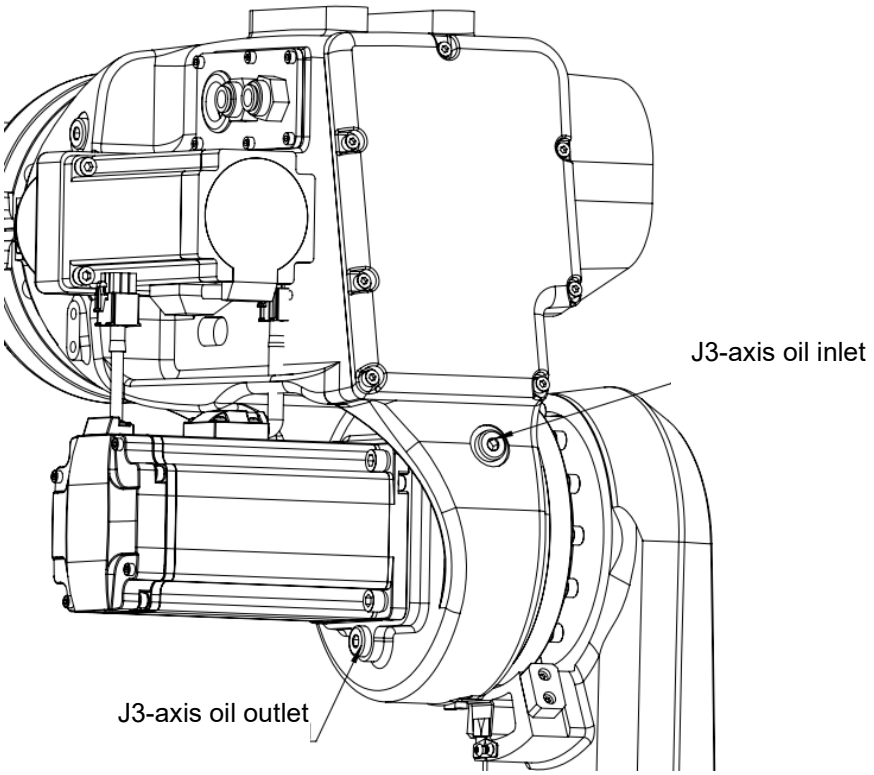

Fig 5.14 J3 axis oil inlet and outlet(ER8-2000-CW)

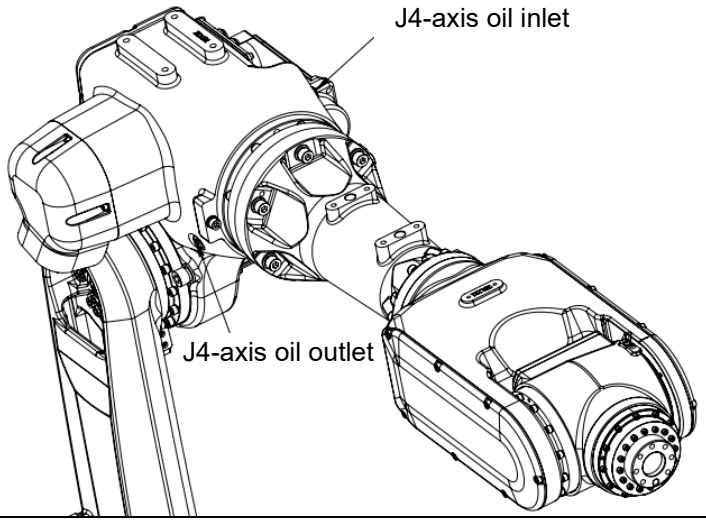

Fig 5.15 J4 axis oil inlet and outlet(ER8-1500-CW)

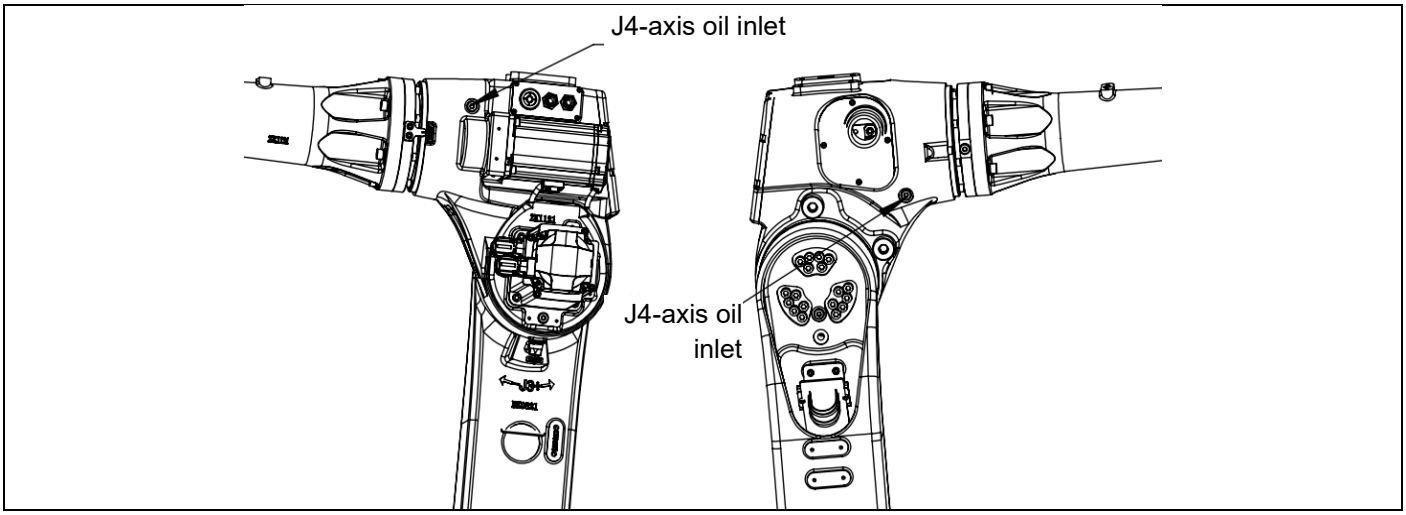

Fig 5.16 J4 axis oil inlet and outlet(ER8-2000-CW)

5.5.2. PROCEDURE OF GREASING

The following steps only applied to operation of reducers of J1, J2, and J3 axis.

a) Teach each joint to run at a speed of 100% for 10-20min, to make the grease into oil with low viscosity.
b) Move the robot to the gesture of greasing, then turn off the power supply.
c) Put an oil recycle container beneath the grease outlet.
d) Remove the screw on the inlet and outlet of each joint.
e) Inject new grease via the oil inlet until new grease goes out of the outlet. The amount of oil injected should be equal to the amount that is discharged (including those discharged after warming up the machine).
f) Release the residual pressure in the grease groove according to section 5.4.3.
g) Install the screw to oil inlet and outlet with a torque of 13.7N·m.

If greasing is not performed properly, the internal pressure inside the grease bath may increase suddenly, which will damage the seal part, resulting in oil leakage and abnormal operation. Therefore, when performing greasing, observe the following precautions.

- Open the grease bath vent (remove the screw on the oil outlet) before greasing.
- Inject the grease/oil slowly without excessive force.
- Avoid compressed gas pump (powered by factory gas source) whenever possible.
- Use specified model of grease/oil. Unauthorized model of grease may cause damage to the reducer or other problems.
- When greasing is completed, make sure that there is no oil/grease leakage outside the outlet. and the grease bath is not pressurized. Then close the outlet.
- Clean the excess oil/grease on the floor to avoid accidents such as slipping or fire.

5.5.3. PROCEDURE FOR RELEASING REMAINING PRESSURE WITHIN THE GREASE BATH

Release remaining pressure with the following procedures. Attach bags under the oil outlet to prevent spilled oil/grease from splattering.

1. Power the robot, and operate at a 100% speed with full load for 4 hours continuously.
2. Stop the running program of the robot at zero position, turn off the servo power with the teach pendant.
3. Disassemble the screw at oil inlet of each axis after safety confirmation. Do not face the screw when removing it, in case that oil with high pressure and high temperature ejects, resulting personnel injury.
4. Retighten the screw 3% seconds later after removing it, and clean up the oil around the screw with a clean cloth.
5. Be sure to complete pressure releasing of a robot (step c and step d) in 15 minutes. Otherwise, it should be repeated from step 1.

6. CALIBRATION

6.1 INTRODUCTION

Calibration associates the angle of each robot axis with the pulse count value supplied from the absolute Pulse coder connected to the corresponding axis motor. To be specific, calibration is an operation for obtaining the pulse count value, corresponding to the zero position.

"Calibration" is factory-performed. It is unnecessary to perform calibration in daily operation. However, calibration becomes necessary after:

- Motor replacement
- Pulsecoder replacement
- Reducer replacement
- Cable replacement
- Batteries for pulse count backup in the mechanical unit have gone dead

CAUTION	**Robot data (including calibration data) and pulse coder data are backed up by their respective backup batteries. Data will be lost if the batteries die. Replace the batteries in the controller and mechanical units periodically. An alarm will occur when battery voltage is low.**

6.2 QUICK ZERO POSITION CALIBRATION

Quick zero position calibration is performed at factory with all loads uninstalled using special apparatus. Based on the robot parameter, this method provides the most precise zero position calibration.

Quick zero position calibration can reload zero position data that stored in the controller, when zero position data lost due to electrical or software faults. If the zero position data lost due to disassembly or maintenance, this method cannot be used.

ESTUN robot use encoder data as an auxiliary of calibration. Procedures are shown below.

a) Jog the robot manually to the place where the calibration marks are align.

b) Display the encoder information screen. Jog the axis at a low speed to make the real single loop value close to the reference value.

c) Calibrate the zero position of the axis. Create a new program, then create a new instruction "RefRobotAxis", and run it.

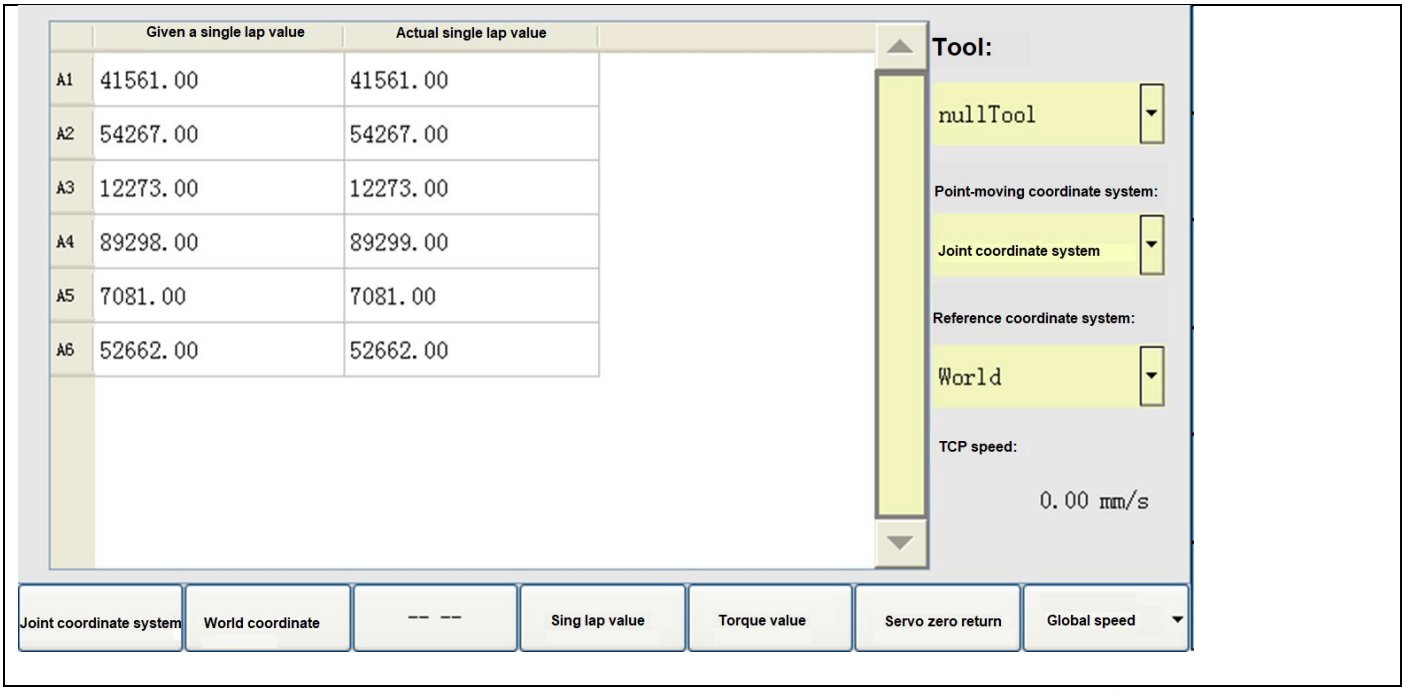

Fig 6.1 Single loop value of quick zero position calibration（ ERC controller）

6.3 MECHANICAL ZERO POSITION CALIBRATION

6.3.1. ZERO POSITION CALIBRATION METHOD

Mechanical disassembly or maintenance may cause zero position data lost. mechanical zero position calibration is performed with all axes jogged to zero-position using their respective witness marks.

Use the J1 axis as an example to illustrate the calibration procedure. There is a marking on the robot base and the rotation base, please follow the steps below to calibrate.

a) With using teaching pendant to move J1 axis so that the middle tick marks of the two scale plates are aligned.

b) Set this position as zero position of J1-axis with the teach pendant.

Perform zero position calibration for each axis with procedures recommended above. If calibration for all axes has been performed and recorded, zero position for each axis can be set with teach pendant. Figures in this section are reference for calibration of other axes.

6.3.2. CALIBRATION IN EACH AXIS

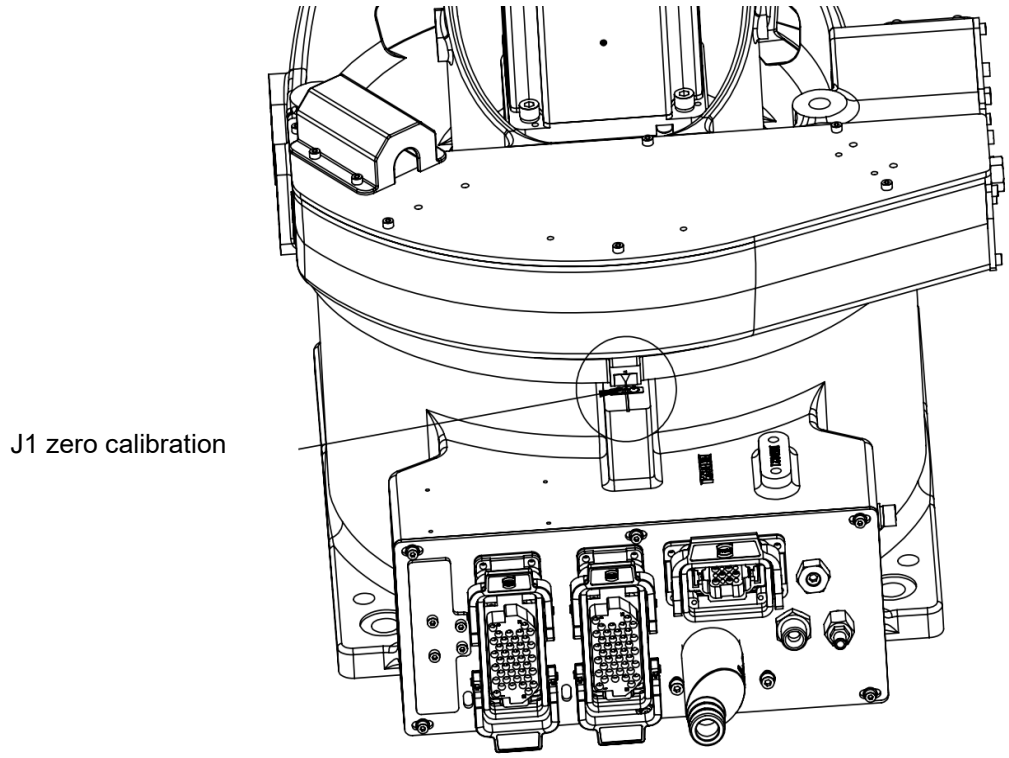

Fig 6.2 J1 axis calibration

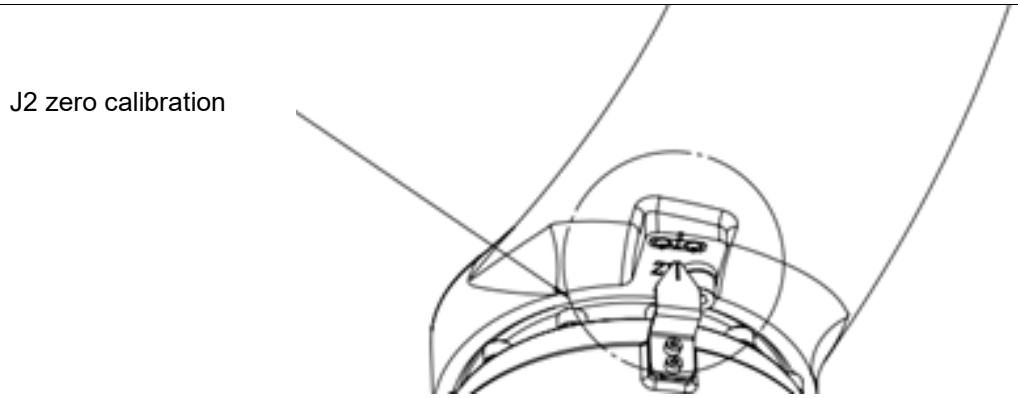

Fig 6.3 J2 axis calibration（ER8-1450-HW）

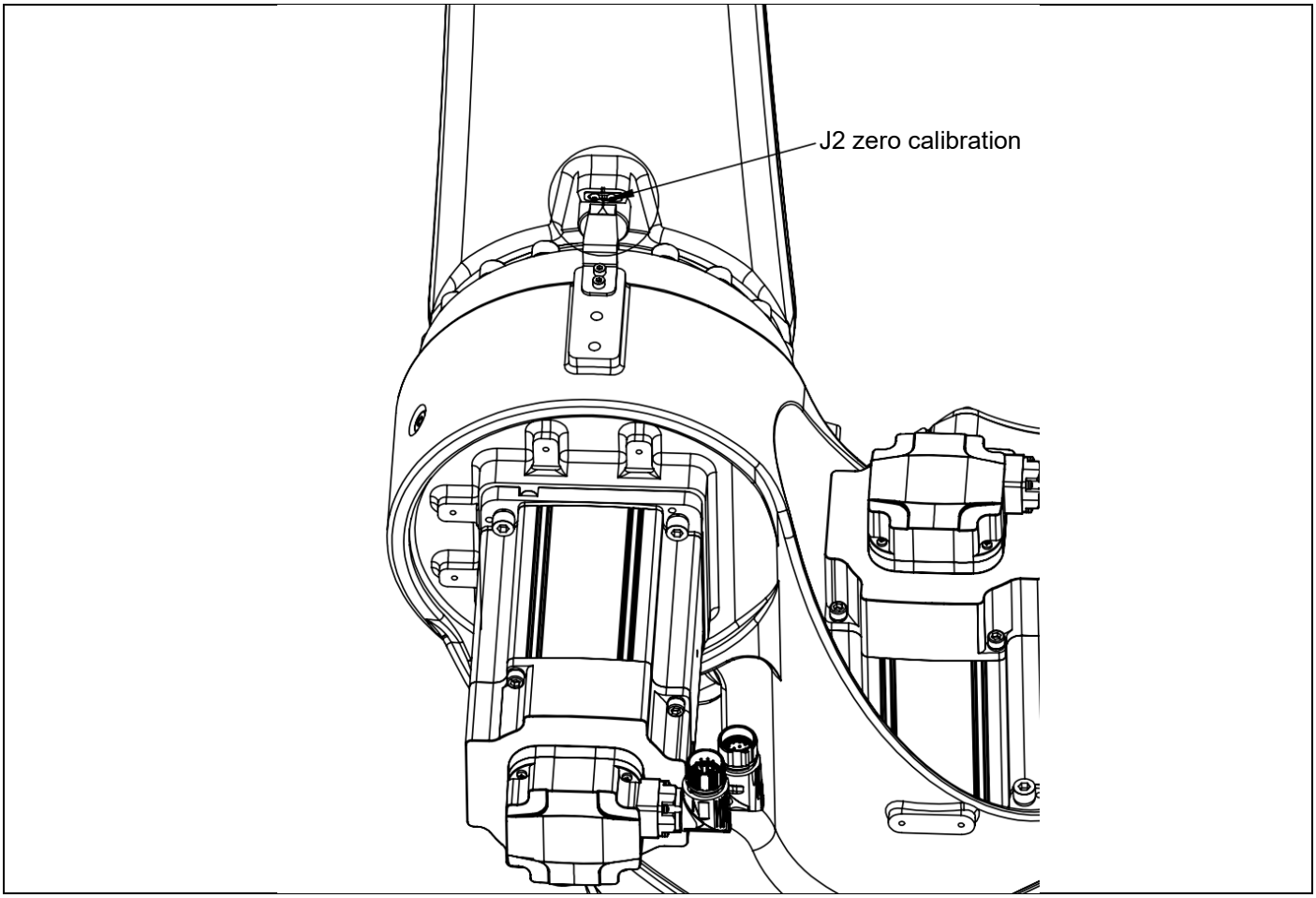

Fig 6.4 J2 axis calibration（ER8-1500-CW、ER8-2000-CW、ER8-2000-HW、ER8-2000-HW-T）

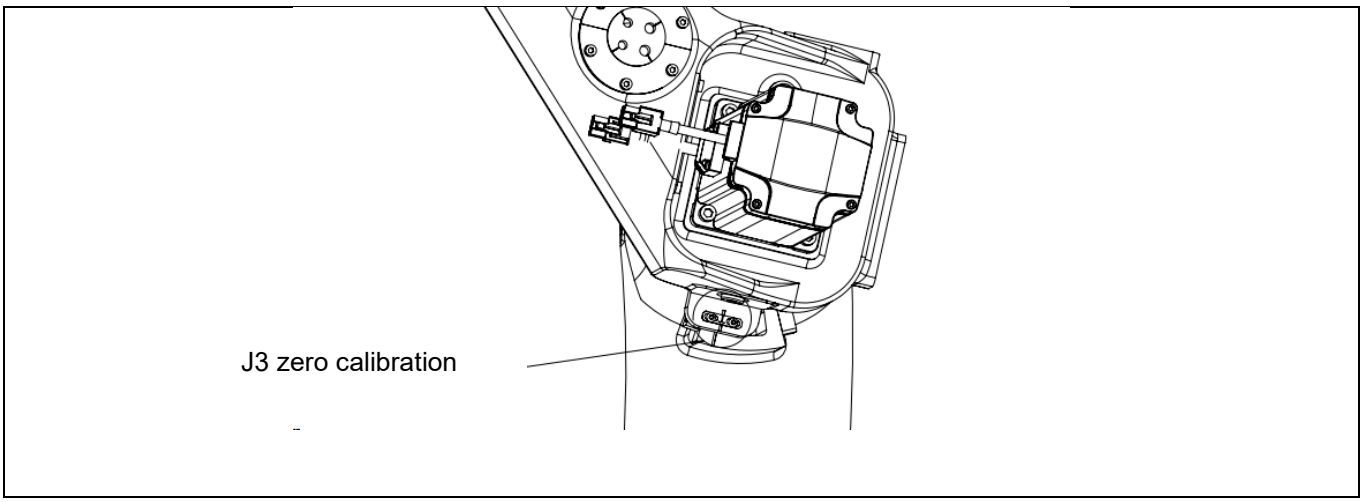

Fig 6.5 J3 axis calibration（ER8-1450-HW）

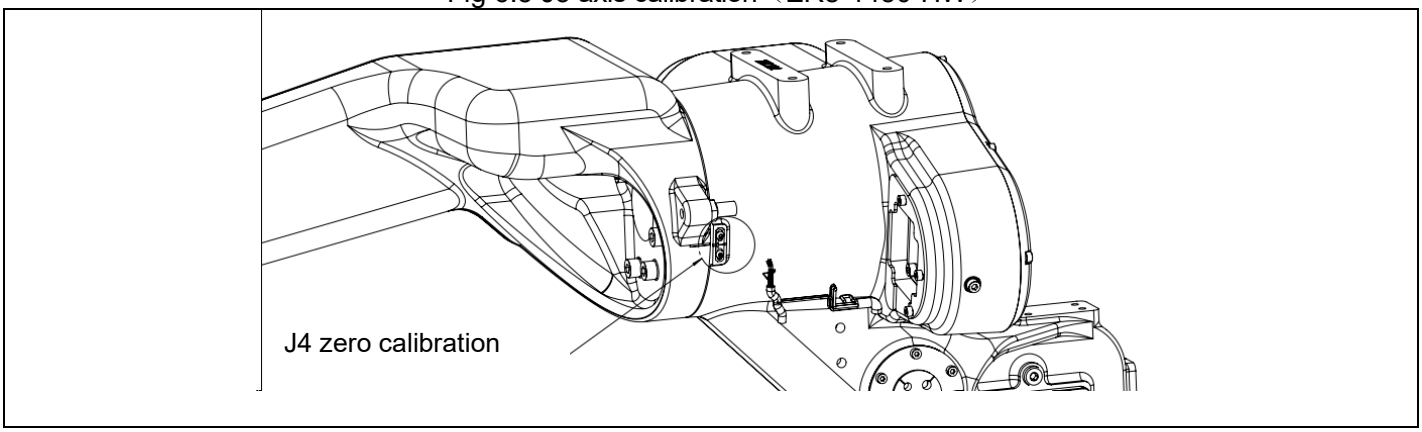

Fig 6.6 J4 axis calibration（ER8-1450-HW）

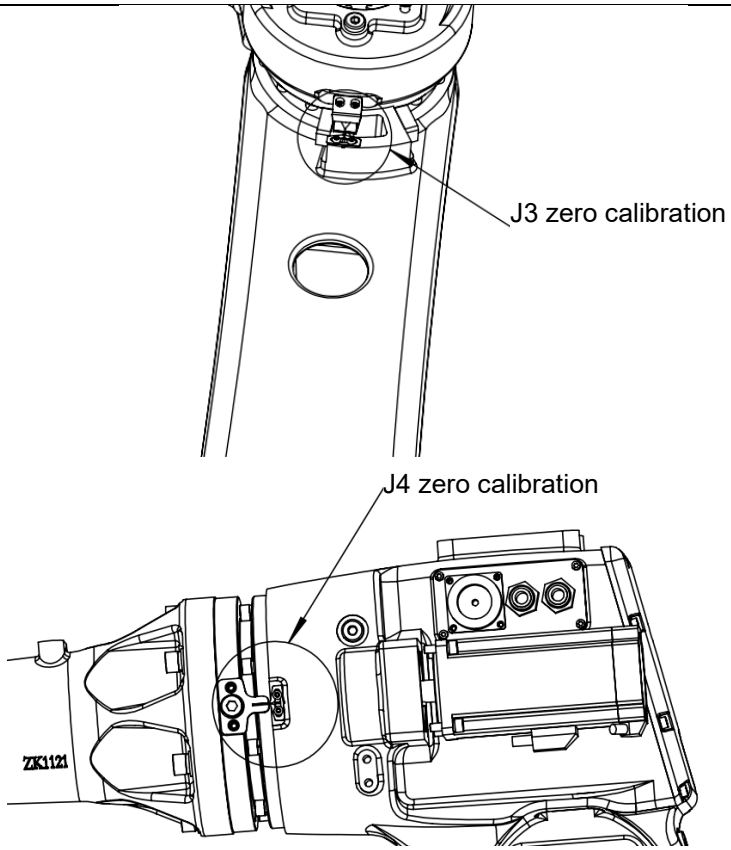

Fig 6.7 J3、J4 axis calibration（ER8-1500-CW）

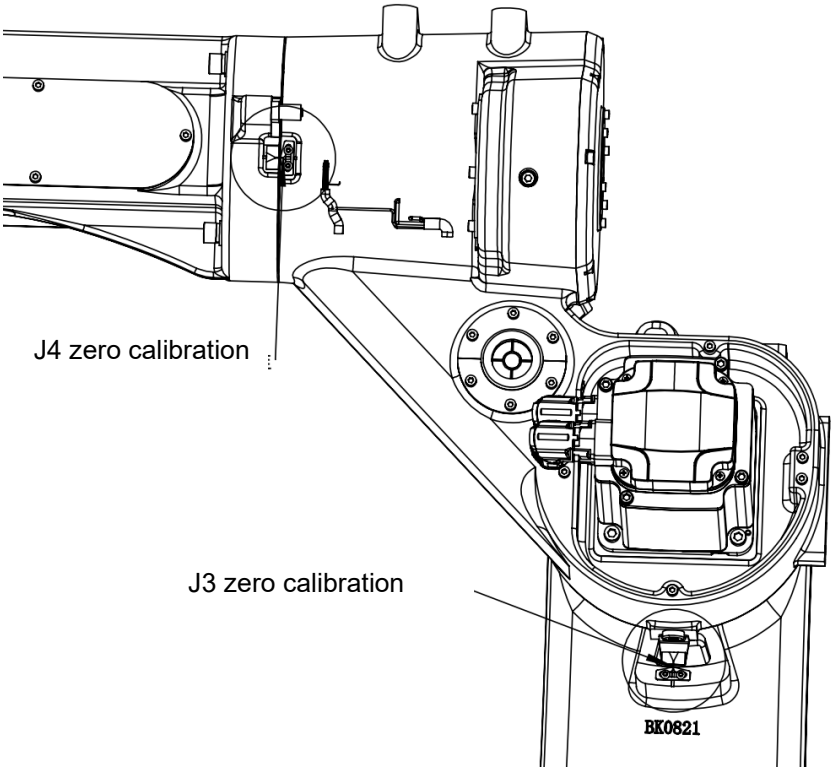

Fig 6.8 J3、J4 axis calibration（ER8-2000-HW、ER8-2000-HW-T）

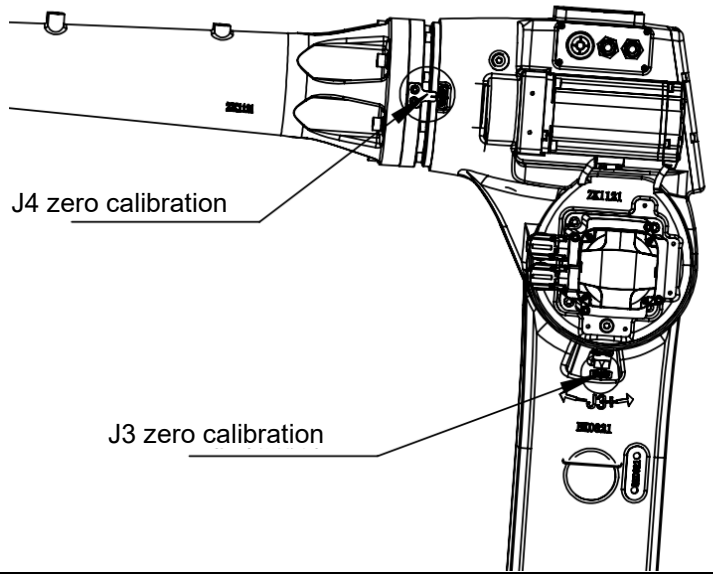

Fig 6.9 J3、J4 axis calibration（ER8-2000-CW）

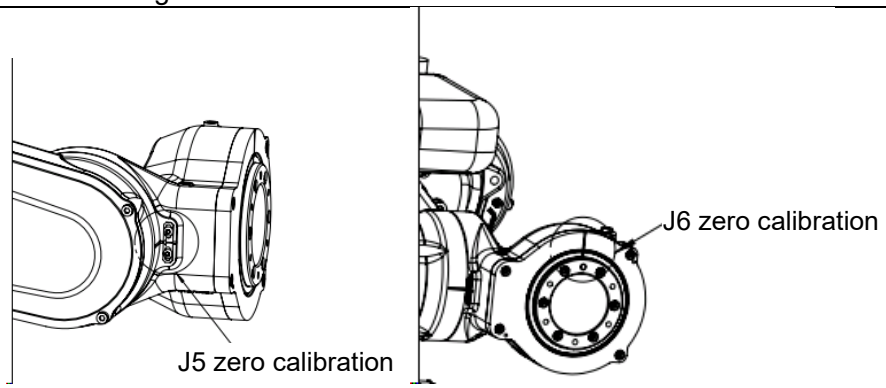

Fig 6.10 J5、J6 axis calibration（ER8-1450-HW）

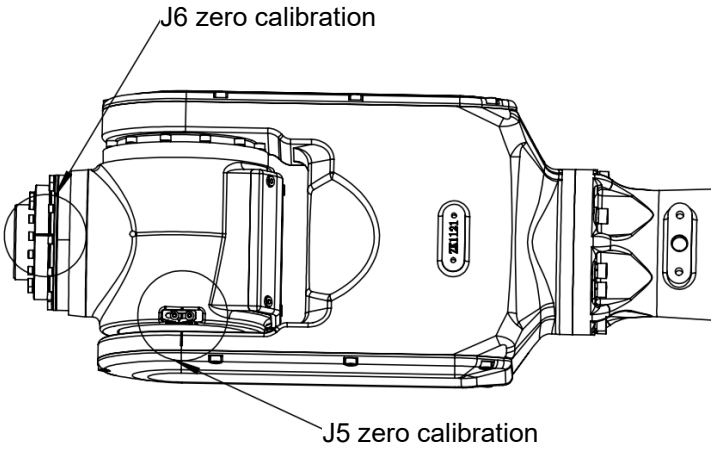

Fig 6.11 J5、J6 axis calibration（ER8-1500-CW）

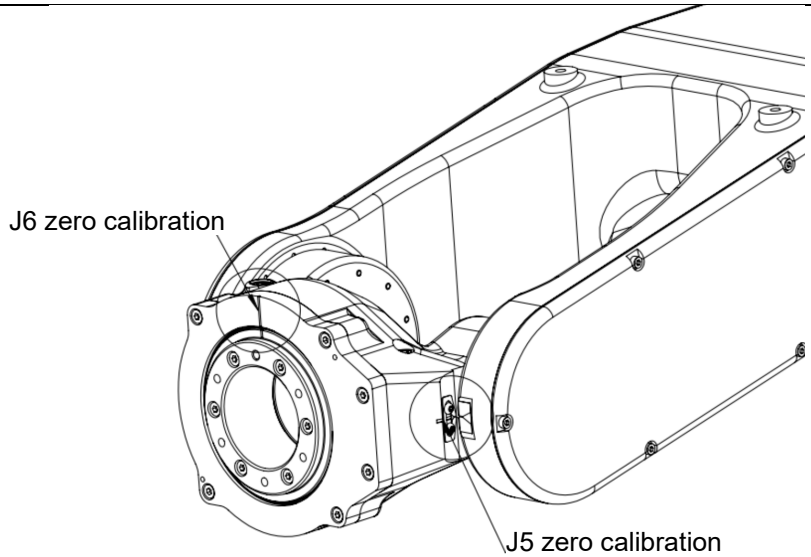

Fig 6.12 J5、J6 axis calibration（ER8-2000-HW、ER8-2000-HW-T）

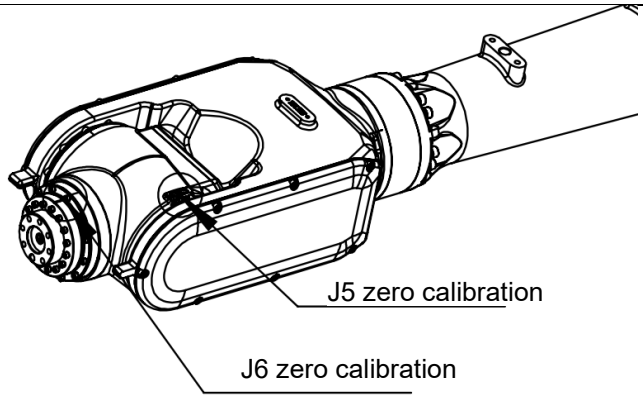

Fig 6.13 J5、J6 axis calibration（ER8-2000-CW）

7. TROUBLESHOOTING

Be sure to read SAFETY PRECAUTIONS and understand its contents before any maintenance.

CAUTION	**Never perform any maintenance unless the power of the robot system is turned off.**

7.1 TOOLS

Troubleshooting tools includes travelling crane, forklift, internal hexagonal wrench, monkey wrench and special tools for removing the bearings.

7.2 TROUBLESHOOTING

Symptom	Description	Cause	Measure
Vibration and Noise	Unfirm connection between base and floor.	Frequent vibration due to robot operation causes unfirm connection.	Reinforce the connection between robot base and floor.
	Joint connection is loose.	It is likely caused by a loose bolt, or lack of bolt fastening measures (such as screw fastening agent, spring washer) on the joint.	Re-mount and re-fasten the bolts.
	Vibration becomes serious when the robot is at a certain speed.	The robot control program is too demanding for the robot hardware.	Modify the control program.
	Vibration becomes serious when the robot adopts a specific posture.	It is likely the robot is overloaded.	Reduce the robot load.
	Damaged reducer.	Prolonged usage of the reducer.	Replace the reducer.
	Vibration occurs after the robot collided with an object or was overloaded for a long period.	The reducer or the joint structure was damaged due to collision or overload.	Replace the reducer or structure where the vibration occurs.
	Some relationship may occur between the robot and the machine near it.	The robot resonates with the machine near it.	Change the distance between the robot and the other machines.
Click	The robot wobbles due to push by hand when turn off it.	Bolts in the robot joint loosen due to overload or collision.	Check tightness of motor retaining bolt, reducer retaining bolt, reducer retaining bolt and mounting bolt of each joint. If any bolt is loose, re-tight it.
Motor overheat	The motor overheated due to the ambient temperature rose or a cover was attached to the motor.	Ambient temperature roses or the motor is overheated, and could not release the heat.	Reduce the ambient temperature, make ventilation well and remove the cover of the motor.
	Changing the robot control program or the load.	Program or load is too demanding for the robot.	Modify the program and reduce the load.

Symptom	Description	Cause	Measure
	Parameters imported to the controller are changed, the motor overheated.	Parameters imported are not correct with the robot.	Import correct parameters.
Gear case grease leakage	Grease leakage from the joint.	Prolonged usage of the robot leads to a damage of the oil seal.	Replace the oil seal and O-ring.
		There is a gap on the surface of the seal.	Re-mount and tighten the oil seal.
		There is a problem with the oil inlet or outlet.	Replace the oil inlet or the bolt.
Dropping joint	The robot axis cannot stop at a certain position, or drops in standstill due to gravity.	There is a problem with the servo motor brake.	Replace the servo motor.

7.3 REPLACING THE SERVO MOTOR

Contact ESTUN representative if servo motor replacement is needed.

WARNING

When removing some parts of the robot, other parts may lose support, thus leads to unexpected movement, and cause personnel injury and equipment damage. Disassembling of the robot must been performed by authorized person.

CAUTION

When replacing servo motors, the disassembled parts should be kept properly and cleaned thoroughly before remounting. Replace it when damage occurs.

APPENDIX

APPENDIX A BOLT TORQUE LIST

Bolt Models (GB/T 70.1)	M3	M4	M5	M6	M8	M10	M12	M14	M16	M18
Tightening Torque /N.m (Level 12.9)	2	4	9.01 ±0.49	15.6 ±0.78	37.2 ±1.86	73.5 ±3.43	129 ±6.37	205 ±10.2	319 ±15.9	441 ±22

APPENDIX B SPECIFICATION OF BOLT

Nominal diameter	Screw dimension	Drill diameter	Anchor depth(mm)	Max. anchor thickness(mm)	Designed pulling force(kN)	Designed shearing force(kN)	Anti-pull force(kN)
M8	φ8×110	φ10	80	13	10.3	12.3	≥20KN
M10	φ10×130	φ12	90	20	12.3	14.2	≥30KN
M12	φ12×160	φ14	110	25	16.8	17.5	≥40KN
M16	φ16×190	φ18	125	35	28.9	35	≥60KN
M20	φ20×260	φ25	170	65	50.1	51.5	≥90KN
M24	φ24×300	φ28	210	65	75.5	80	≥140KN
M30	φ30×380	φ35	280	70	121.3	163.7	≥200KN
M33	φ33×420	φ38	300	90	135	182	≥260KN

APPENDIX C ER8-1450-HW Suggested spare parts list（for single unit）

S/N	Material code	Name	Qty.	Remark
1	12700000375	Robot servo motor（J1、J2-axis）	2	
2	12700000376	Robot servo motor（J3-axis）	1	
3	12700000058	Robot servo motor（J4-axis）	1	
4	12700000157	Robot servo motor（J5、J6-axis）	1	
5	31500000010	Lithium battery LS14500[No leads, no plugs]	6	
6	G5400000323	Timing belt（J4-axis）	1	
7	G5400000322	Timing belt（J5-axis）	1	
8	G5400000321	Timing belt（J6-axis）	1	

APPENDIX D ER8-1500-CW Suggested spare parts list（for single unit）

S/N	Material code	Name	Qty.	Remark
1	12700000375	Robot servo motor（J1、J2-axis）	2	
2	12700000376	Robot servo motor（J3-axis）	1	
3	12700000059	Robot servo motor（J4-axis）	1	
4	12700000054	Robot servo motor（J5-axis）	1	
5	12700000055	Robot servo motor（J6-axis）	1	
6	51200000103	Sunmoon_3.6V/AA/ER14505_Wuhan Zhongyuan	6	
7	G5401000049	Timing belt（J5-axis）	1	

APPENDIX E ER8-2000-CW Suggested spare parts list（for single unit）

S/N	Material code	Name	Qty.	Remark
1	12700000298	Robot servo motor（J1、J2-axis）	2	
2	12700000526	Robot servo motor（J3-axis）	1	
3	12700000487	Robot servo motor（J4-axis）	1	
4	12700000673	Robot servo motor（J5-axis）	1	
5	12700000224	Robot servo motor（J6-axis）	1	
6	51200000103	Sunmoon_3.6V/AA/ER14505_Wuhan Zhongyuan	6	
7	G5401000049	Timing belt（J5-axis）	1	

APPENDIX F ER8-2000-HW Suggested spare parts list（for single unit）

S/N	Material code	Name	Qty.	Remark
1	12700000298	Robot servo motor（J1、J2-axis）	2	
2	12700000526	Robot servo motor（J3-axis）	1	
3	12700000058	Robot servo motor（J4-axis）	1	
4	12700000157	Robot servo motor（J5、J6-axis）	2	
5	51200000103	Sunmoon_3.6V/AA/ER14505_Wuhan Zhongyuan	6	
6	G5400000306	Timing belt（J5-axis）	1	
7	G5400000307	Timing belt（J6-axis）	1	

APPENDIX G ER8-2000-HW Suggested spare parts list（for single unit）

S/N	Material code	Name	Qty.	Remark
1	12700000298	Robot servo motor（J1、J2-axis）	2	
2	12700000526	Robot servo motor（J3-axis）	1	
3	12700000058	Robot servo motor（J4-axis）	1	
4	12700000157	Robot servo motor（J5、J6-axis）	2	
5	51200000103	Sunmoon_3.6V/AA/ER14505_Wuhan Zhongyuan	6	
6	G5400000306	Timing belt（J5-axis）	1	
7	G5400000307	Timing belt（J6-axis）	1	

REVISION RECORD

Revision	Date	Contents
01	2021.07	New edition.
02	2022.01	Modify 5.5 Robot lubrication notes.
03	2022.07	Add ER8-1500-CW、ER8-2000-CW、ER8-2000-HW
04	2022.09	Add ER8-2000-HW-T，Update the connection to the control unit.

NANJING ESTUN ROBOT ENGINEERING CO., LTD.

1888 Jiyin Avenue, Jiangning Economic Development Zone, Nanjing City

+86-25-58328532 www.estun.com

+86-25-52785576 export@estun.com